Lag	Tavla	
13	1	Anna Löfvander

	Dagstorp - Lilla Harrie	Sen
07.08.2009	SM 2009 Final Liggande	Jönköpings SG

10 skott

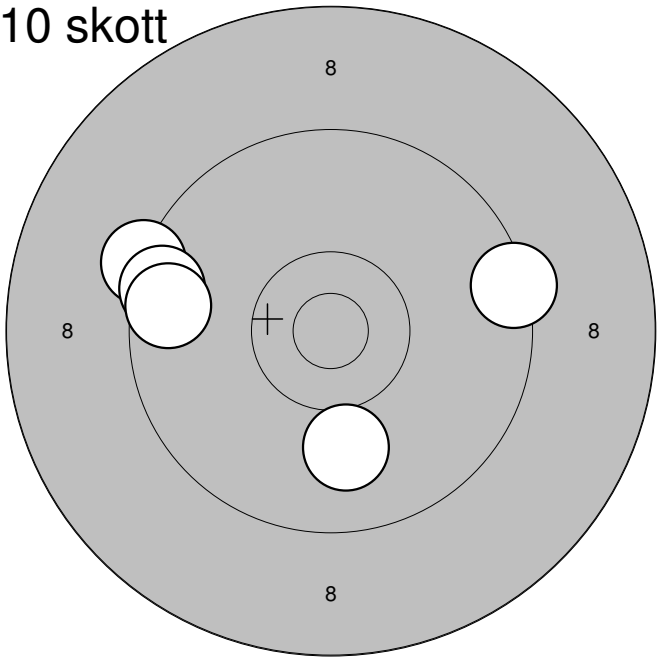

1:	9,4	→
2:	9,3	↖
3:	9,5	←
4:	10,0	↓
5:	9,6	←
Serie:		46,0
Summa:		245,0

10 skott

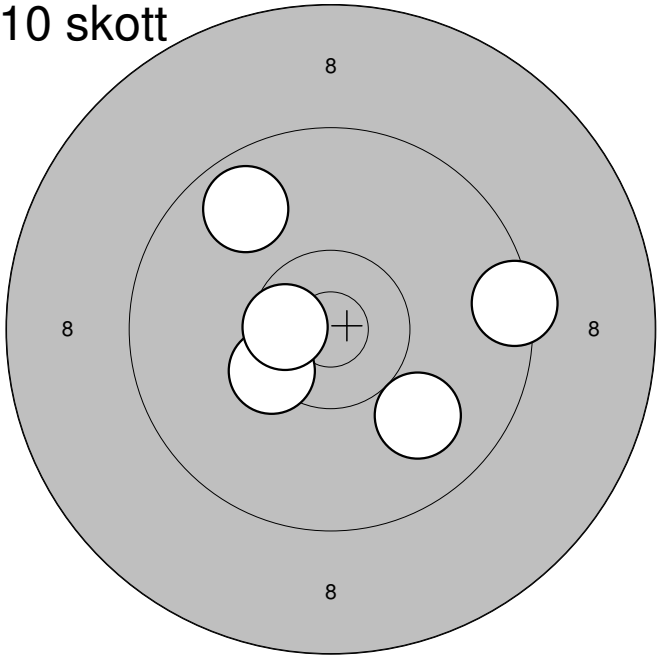

6:	9,9	↘
7:	10,4*	↙
8:	9,4	→
9:	10,6*	←
10:	9,8	↖
Serie:		47,0
Summa:		292,0

Enkeltskott

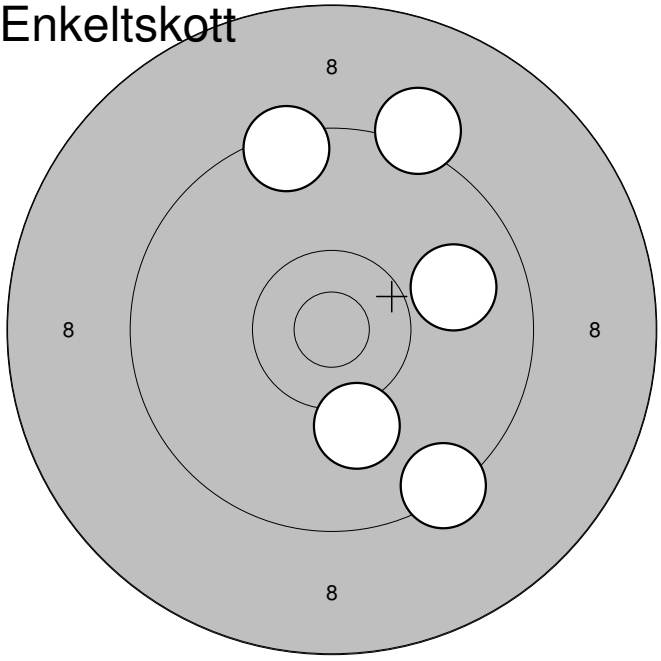

1:	9,4	↘
2:	10,1	↓
3:	9,2	↗
4:	9,4	↑
5:	9,9	→
Serie:		46,0
Summa:		338,0

Lag	Tavla	Pernilla Karlsson		
13	2			
		Flundre	Sen	
07.08.2009		SM 2009 Final Liggande	Jönköpings SG	

10 skott

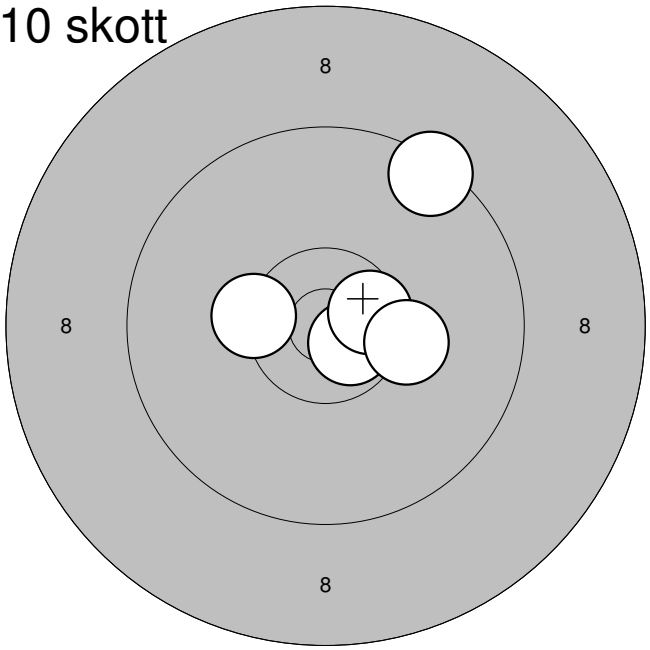

1:	10,7*	↘
2:	10,4*	←
3:	10,6*	→
4:	9,4	↗
5:	10,3	→
Serie:		49,0
Summa:		247,0

10 skott

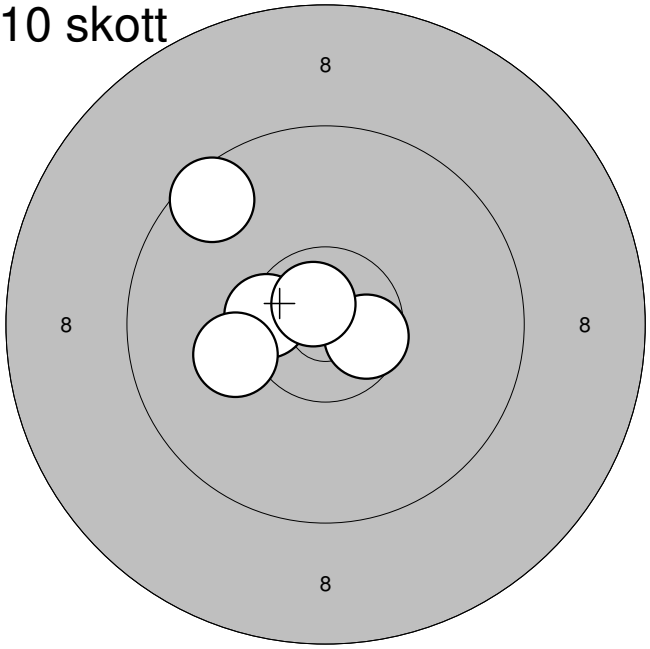

6:	10,6*	→
7:	10,5*	←
8:	10,2	↙
9:	9,6	↖
10:	10,8*	↖
Serie:		49,0
Summa:		296,0

Enkeltskott

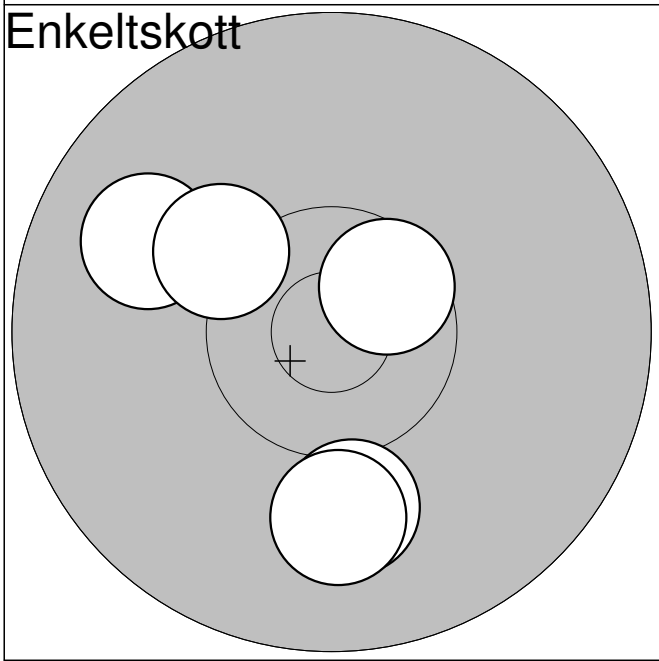

1:	10,0	↓
2:	10,0	↓
3:	10,6*	↗
4:	9,9	↖
5:	10,2	↖
Serie:		49,0
Summa:		345,0

Lag	Tavla	Andrea Franzén		
13	3			
		Arvika	Sen	
07.08.2009		SM 2009 Final Liggande	Jönköpings SG	

10 skott

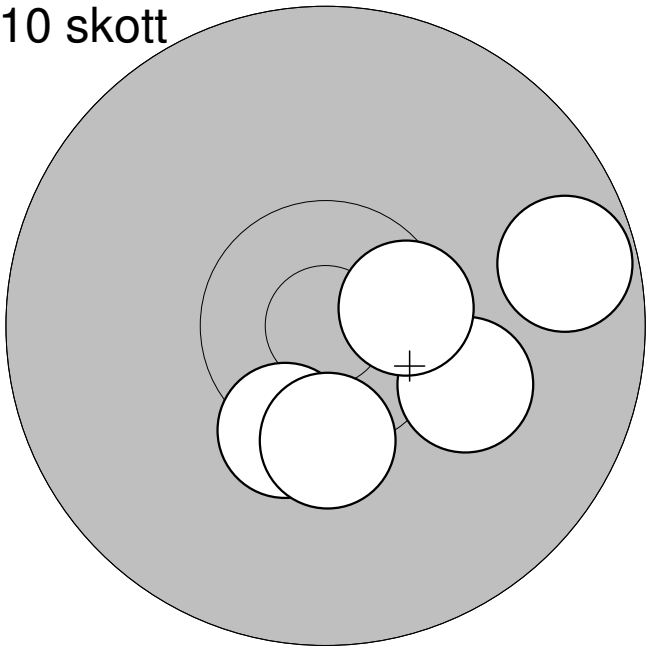

1:	10,4*	↙
2:	10,2	↘
3:	10,5*	→
4:	10,4*	↓
5:	9,7	→
Serie:		49,0
Summa:		246,0

10 skott

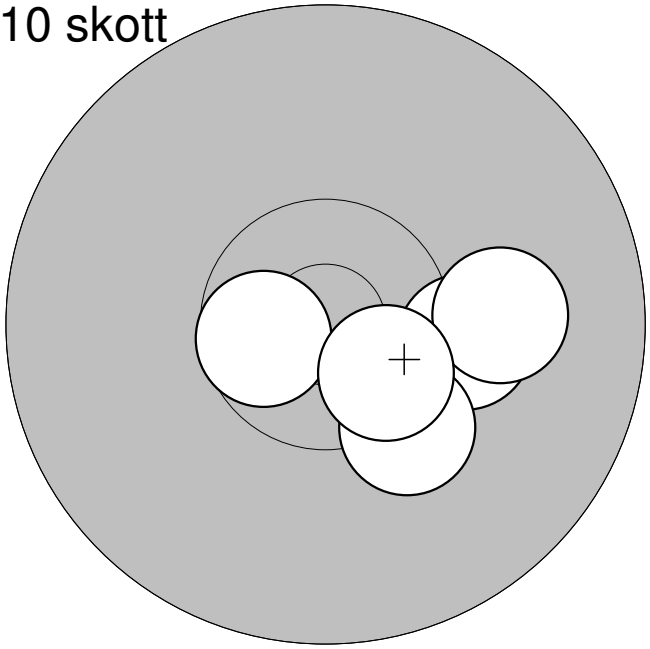

6:	10,2	→
7:	10,6*	←
8:	10,3	↘
9:	10,0	→
10:	10,5*	↘
Serie:		50,0
Summa:		296,0

Enkeltskott

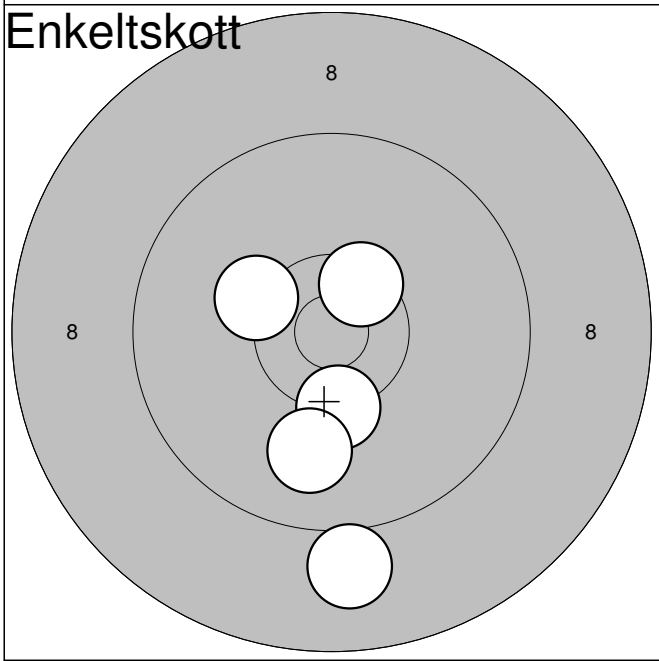

1:	10,3*	↓
2:	9,9	↙
3:	9,0	↓
4:	10,5*	↗
5:	10,3	↖
Serie:		48,0
Summa:		344,0

Lag	Tavla	Johanna Nyman		
13	4			
		Ängelholm	Sen	
07.08.2009		SM 2009 Final Liggande	Jönköpings SG	

10 skott

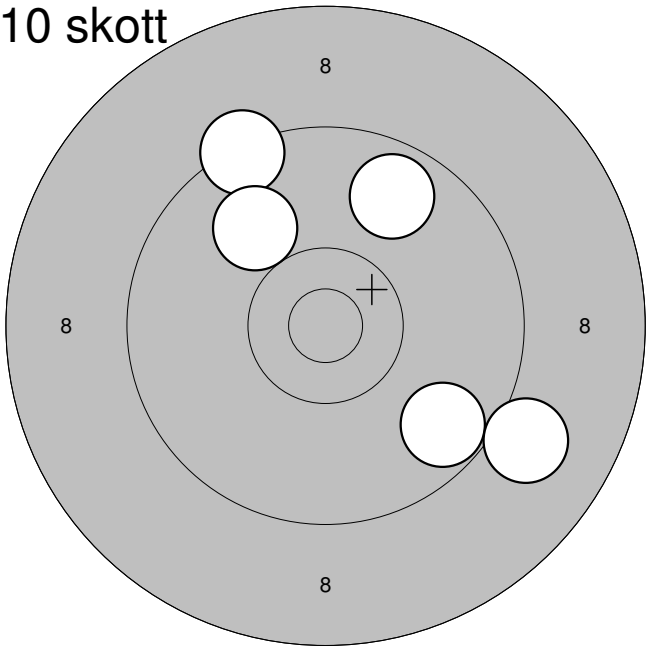

1:	9,4	↖
2:	9,7	↘
3:	9,7	↗
4:	10,0	↖
5:	9,0	↘
Serie:		46,0
Summa:		243,0

10 skott

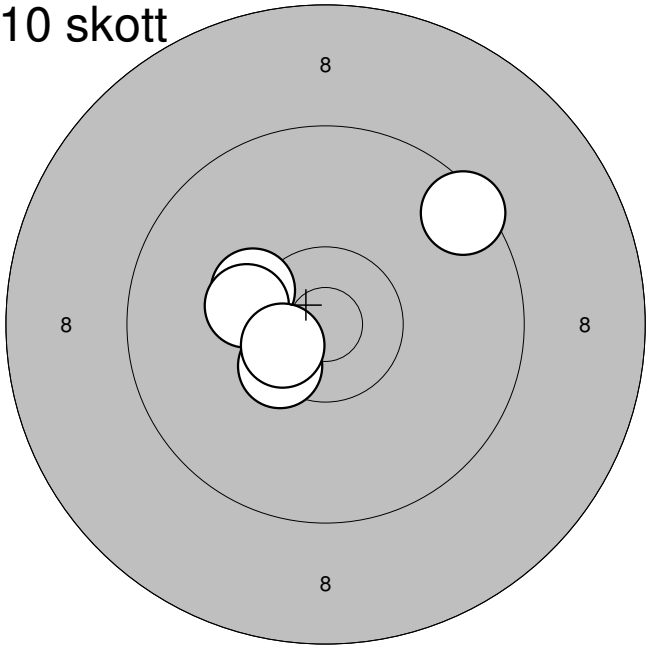

6:	9,5	↗
7:	10,3*	↖
8:	10,3*	←
9:	10,4*	↙
10:	10,6*	↙
Serie:		49,0
Summa:		292,0

Enkeltskott

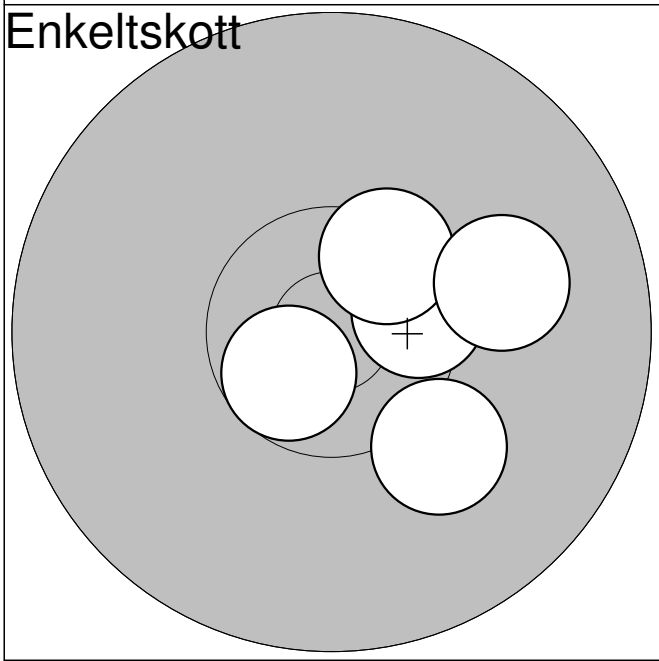

1:	10,5*	→
2:	10,6*	↙
3:	10,5*	↗
4:	10,0	→
5:	10,1	↘
Serie:		50,0
Summa:		342,0

Lag	Tavla	Peter U Larsson		
13	5			
		Vaksala	Sen	
07.08.2009		SM 2009 Final Liggande	Jönköpings SG	

10 skott

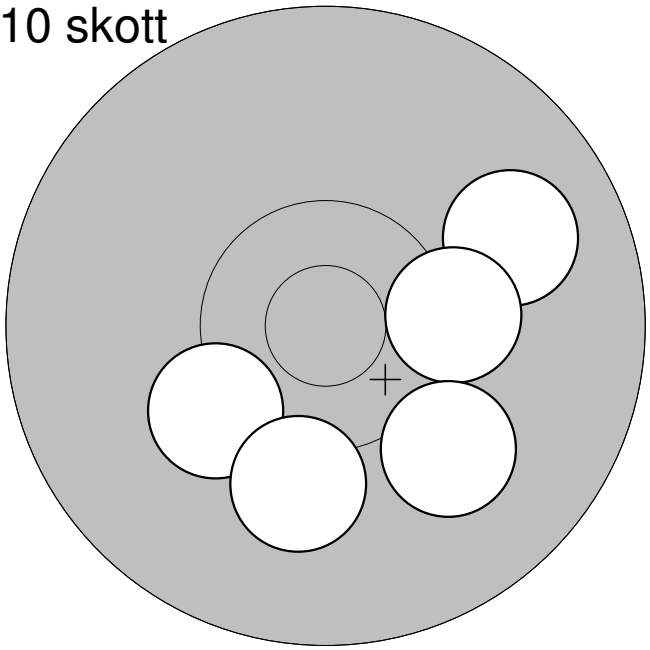

1:	9,9	↗
2:	10,2	↙
3:	10,3	→
4:	10,0	↘
5:	10,1	↓
Serie:		49,0
Summa:		246,0

10 skott

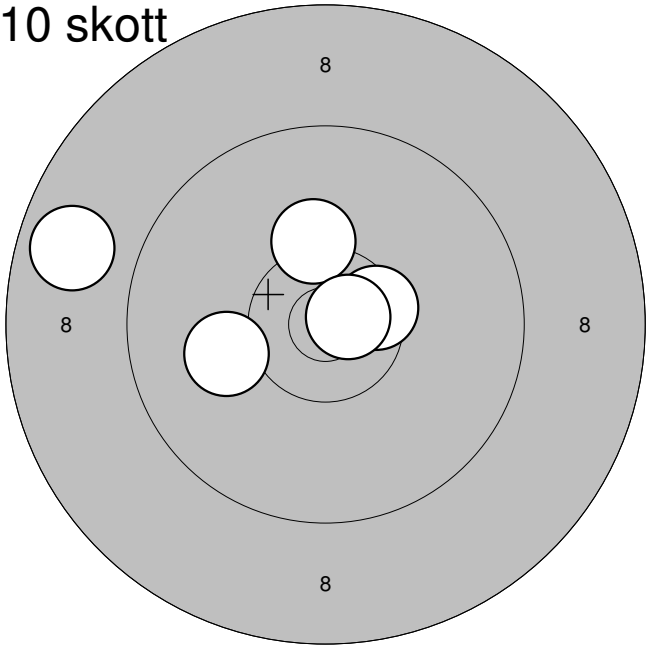

6:	10,1	←
7:	10,3	↑
8:	10,5*	→
9:	10,8*	→
10:	8,8	←
Serie:		48,0
Summa:		294,0

Enkeltskott

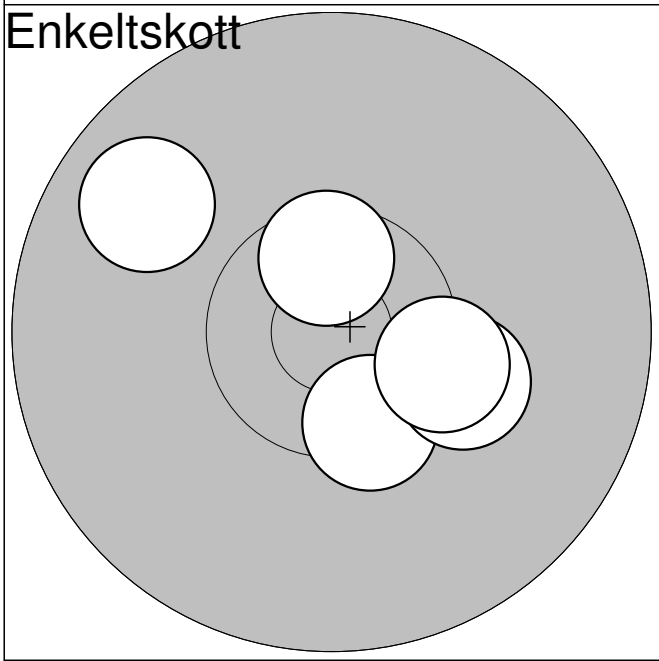

1:	9,8	↖
2:	10,4*	↓
3:	10,2	→
4:	10,4*	→
5:	10,6*	↑
Serie:		49,0
Summa:		343,0

Lag	Tavla	
13	6	Johan Liljedahl

	Falköping	Sen	
07.08.2009	SM 2009 Final Liggande	Jönköpings SG	

10 skott

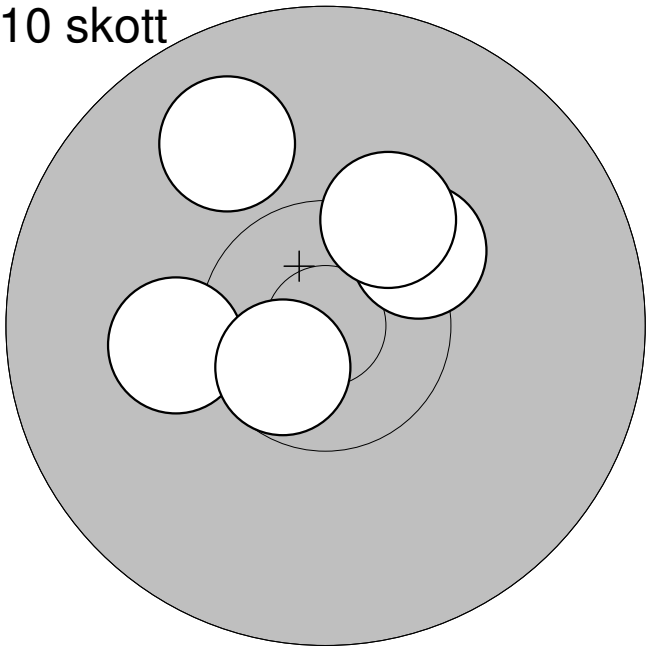

1:	10,3*	↗
2:	10,2	←
3:	10,3*	↗
4:	10,6*	↙
5:	9,9	↖
Serie:		49,0
Summa:		246,0

10 skott

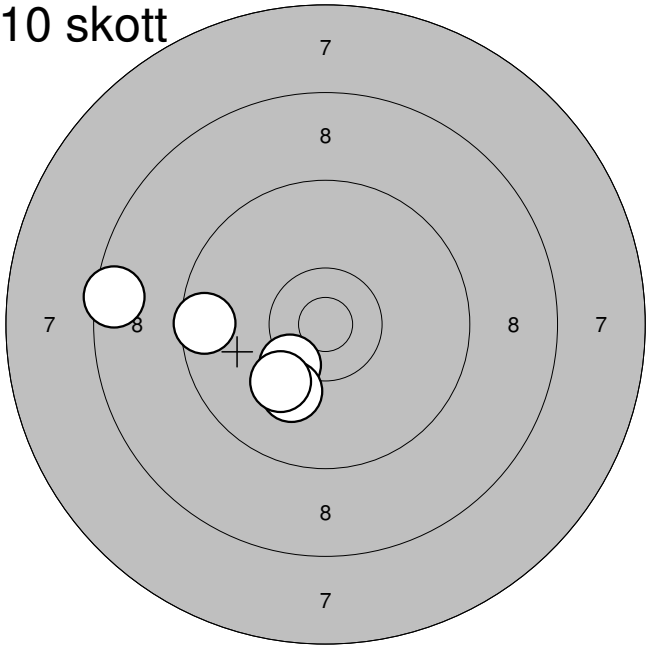

6:	10,3*	↙
7:	9,6	←
8:	8,5	←
9:	10,1	↙
10:	10,1	↙
Serie:		47,0
Summa:		293,0

Enkeltskott

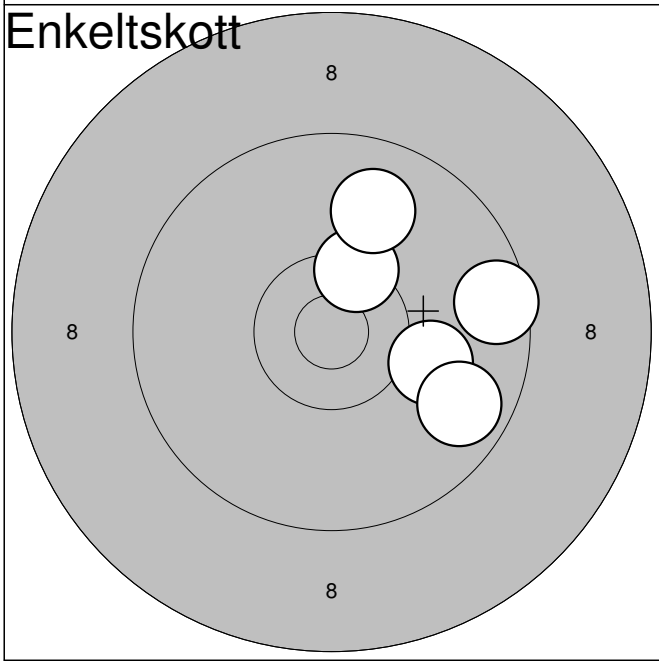

1:	10,1	↘
2:	10,4*	↗
3:	9,6	→
4:	9,7	↘
5:	9,9	↗
Serie:		47,0
Summa:		340,0

Lag	Tavla	Lotten Johansson		
13	7			
		Heby	Sen	
07.08.2009		SM 2009 Final Liggande	Jönköpings SG	

10 skott

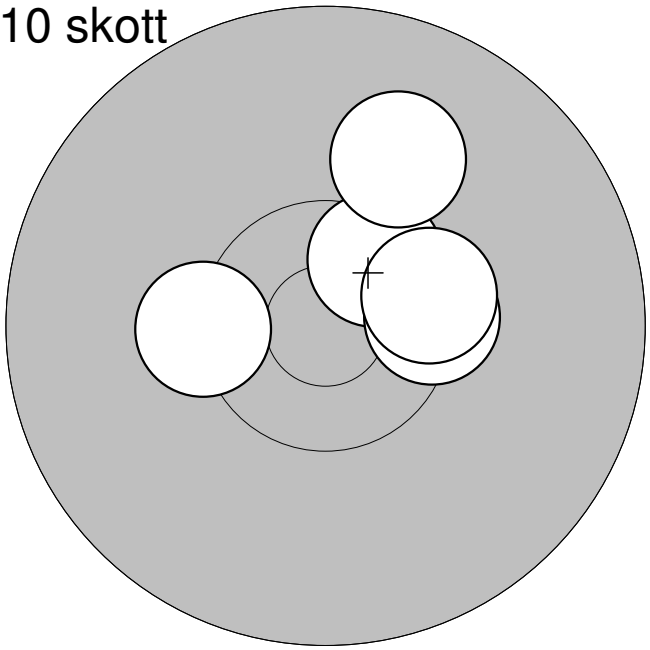

1:	10,5*	↗
2:	10,0	↗
3:	10,3*	←
4:	10,4*	→
5:	10,4*	→
Serie:		50,0
Summa:		247,0

10 skott

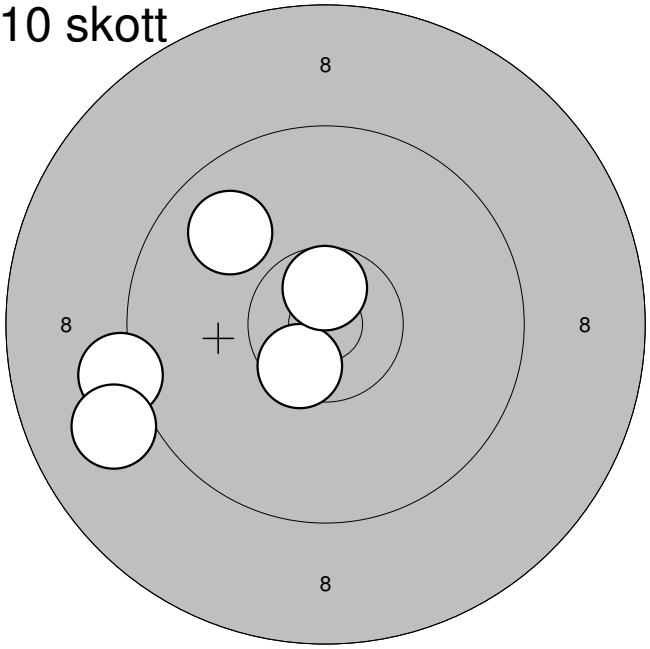

6:	9,9	↖
7:	9,2	←
8:	9,0	↙
9:	10,5*	↙
10:	10,7*	↑
Serie:		47,0
Summa:		294,0

Enkeltskott

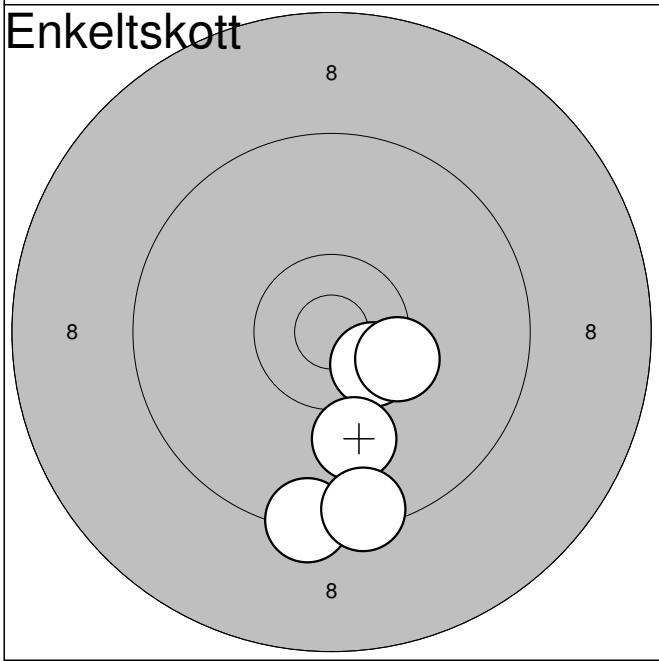

1:	10,5*	↘
2:	9,4	↓
3:	10,0	↓
4:	10,4*	↘
5:	9,5	↓
Serie:		48,0
Summa:		342,0

Lag	Tavla	Anders Johanson		
		Beted	Sen	
07.08.2009		SM 2009 Final Liggande	Jönköpings SG	

10 skott

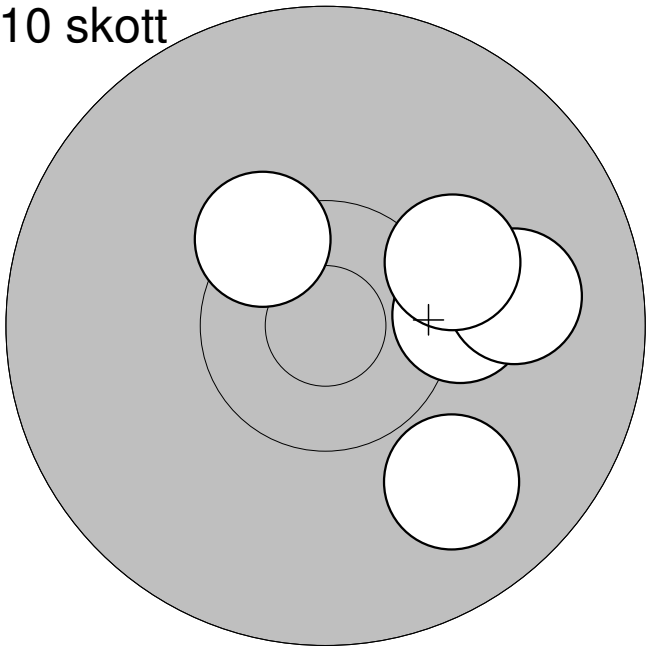

1:	10,3	→
2:	10,4*	↖
3:	10,0	→
4:	10,2	↗
5:	9,9	↘
Serie:		49,0
Summa:		246,0

10 skott

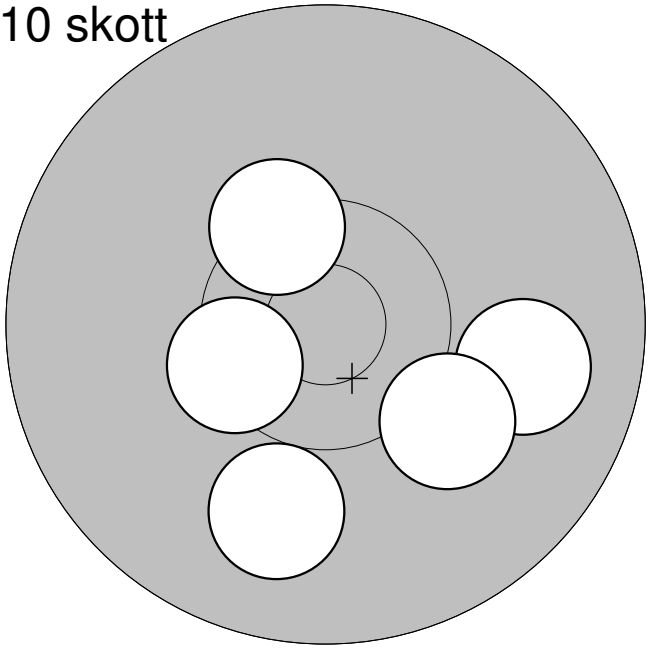

6:	9,9	→
7:	10,4*	↖
8:	10,1	↘
9:	10,0	↙
10:	10,4*	↙
Serie:		49,0
Summa:		295,0

Enkeltskott

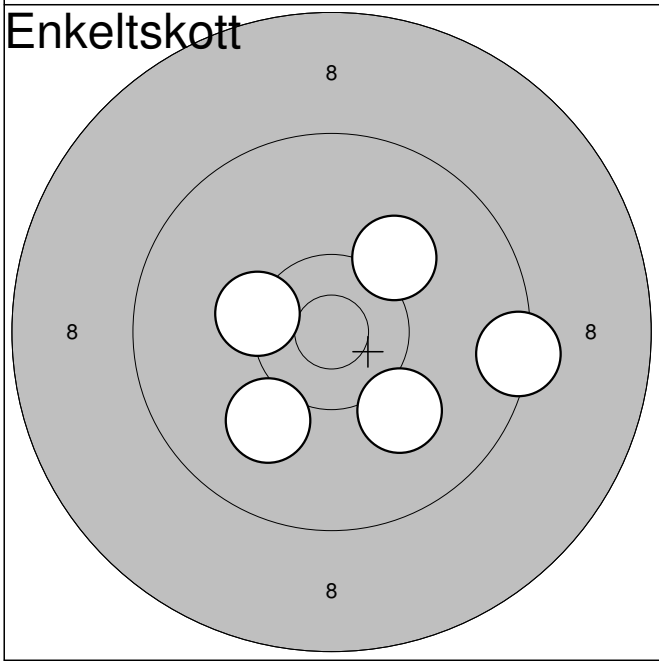

1:	10,3*	←
2:	10,0	↙
3:	9,4	→
4:	10,1	↗
5:	10,1	↘
Serie:		49,0
Summa:		344,0

Lag	Tavla	Fredrika Jönsson		
13	9			
		Göteborg	Sen	
07.08.2009		SM 2009 Final Liggande	Jönköpings SG	

10 skott

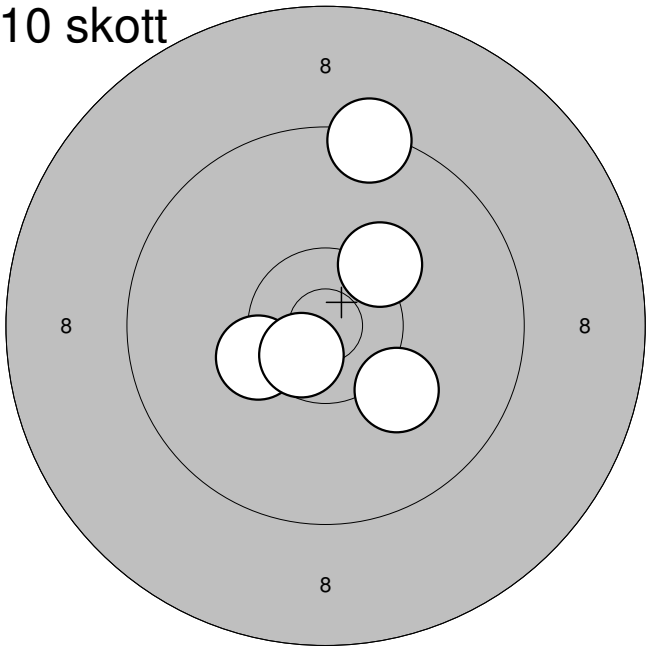

1:	10,3	↗
2:	9,4	↑
3:	10,1	↘
4:	10,3*	↙
5:	10,6*	↙
Serie:		49,0
Summa:		245,0

10 skott

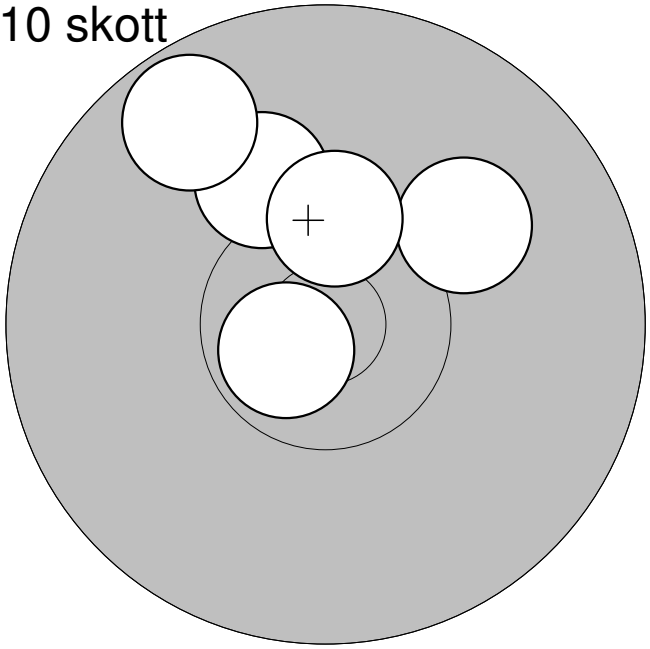

6:	10,1	↖
7:	10,7*	↙
8:	10,1	↗
9:	10,4*	↑
10:	9,7	↖
Serie:		49,0
Summa:		294,0

Enkeltskott

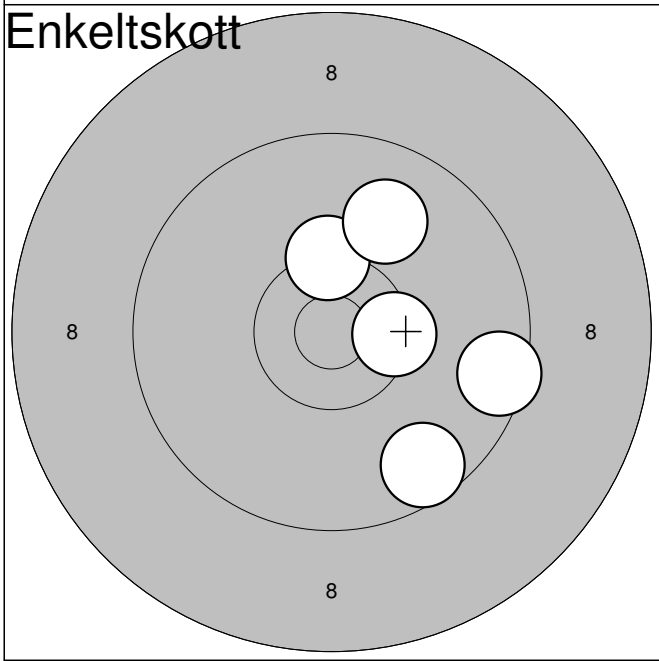

1:	10,3*	↑
2:	10,4*	→
3:	9,6	↘
4:	9,5	→
5:	9,9	↗
Serie:		47,0
Summa:		341,0

Lag	Tavla			
13	10	Göran Yngvard		
		Barkåkra / Hjärnap	Sen	
07.08.2009		SM 2009 Final Liggande	Jönköpings SG	

10 skott

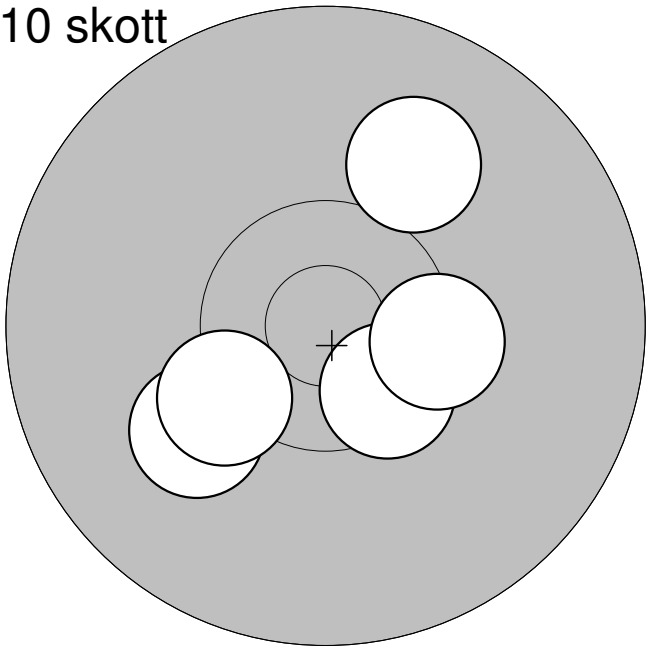

1:	10,5*	↘
2:	10,1	↙
3:	10,4*	→
4:	10,3*	↙
5:	10,0	↗
Serie:		50,0
Summa:		246,0

10 skott

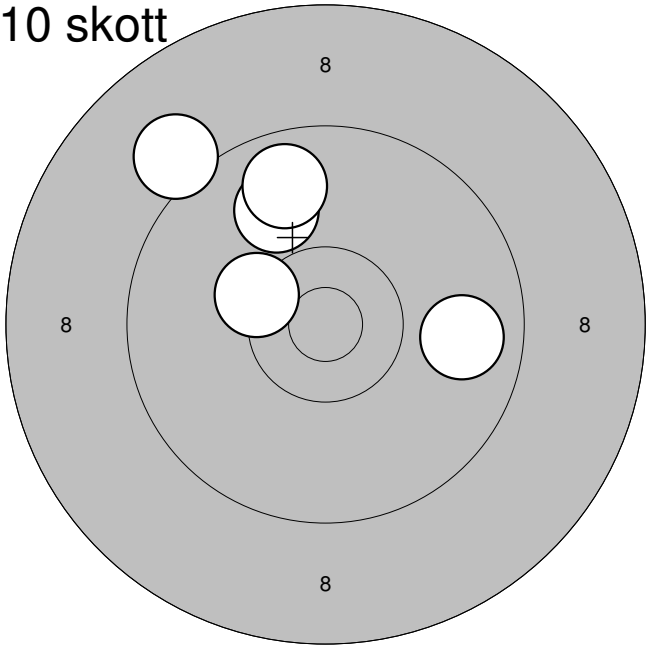

6:	9,8	→
7:	10,3*	↖
8:	9,1	↗
9:	9,9	↗
10:	9,8	↗
Serie:		46,0
Summa:		292,0

Enkeltskott

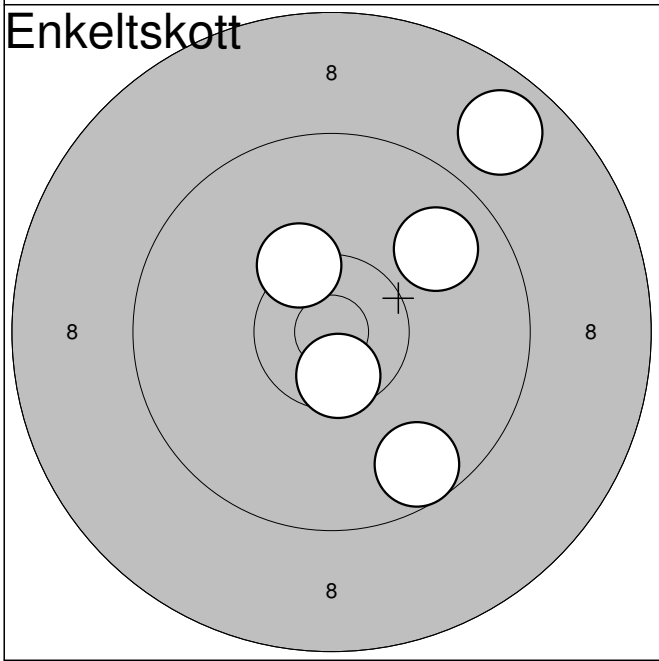

1:	8,8	↗
2:	9,8	↗
3:	10,6*	↓
4:	10,3*	↗
5:	9,6	↘
Serie:		46,0
Summa:		338,0

Lag	Tavla	
13	11	Jessie Svensson

	Sölvesborg	Sen	
07.08.2009	SM 2009 Final Liggande	Jönköpings SG	

10 skott

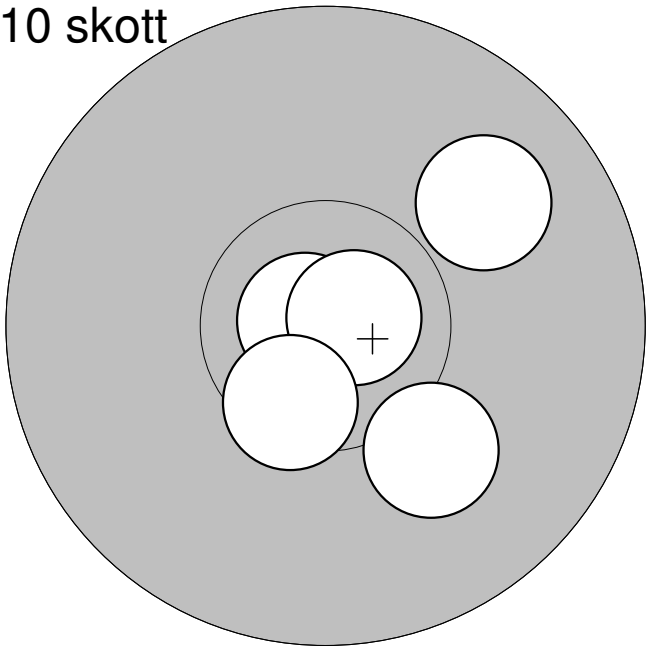

1:	10,8*	←
2:	10,8*	→
3:	9,9	↗
4:	10,5*	↙
5:	10,1	↘
Serie:		49,0
Summa:		245,0

10 skott

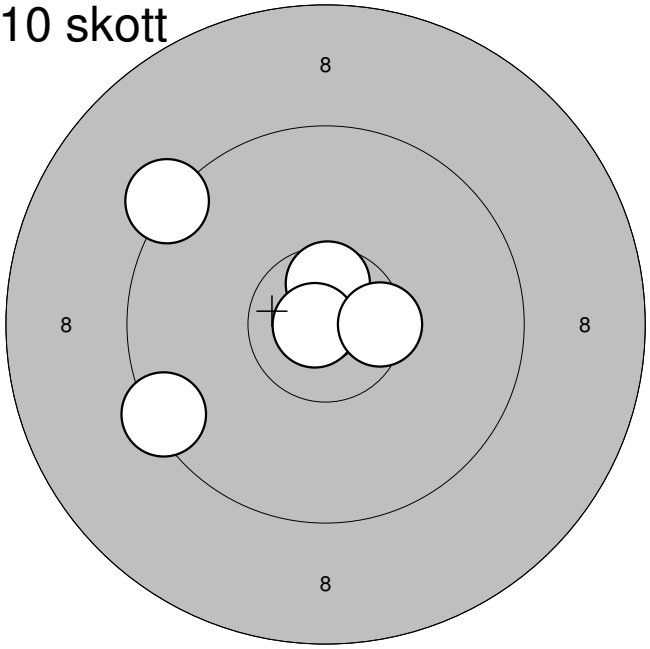

6:	9,4	↙
7:	10,6*	↑
8:	10,9*	←
9:	10,5*	→
10:	9,3	↖
Serie:		48,0
Summa:		293,0

Enkeltskott

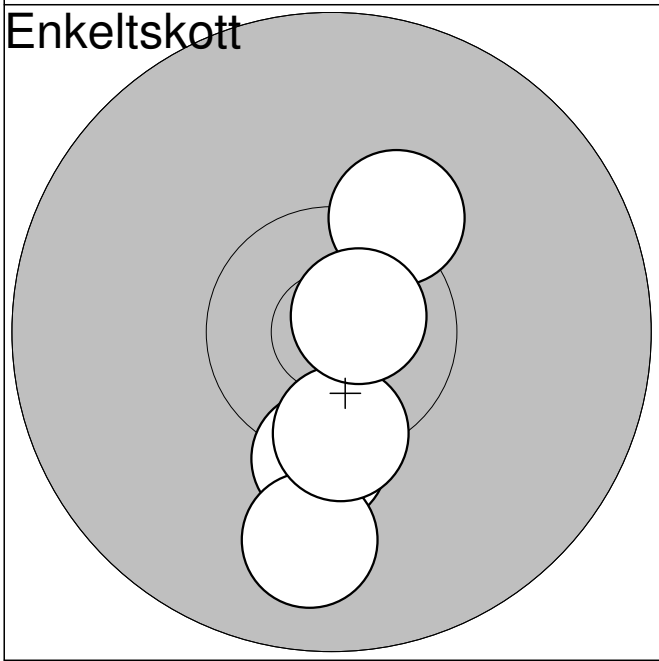

1:	10,3	↗
2:	10,3*	↓
3:	9,9	↓
4:	10,4*	↓
5:	10,8*	↗
Serie:		49,0
Summa:		342,0

Lag	Tavla	
13	12	Per Magnusson

	Skillingmark	Sen	
07.08.2009	SM 2009 Final Liggande	Jönköpings SG	

10 skott

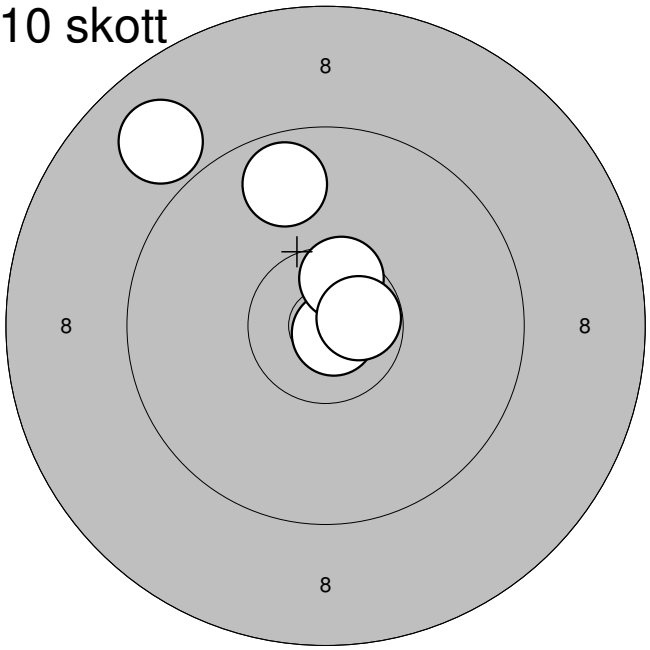

1:	10,9*	↘
2:	9,7	↑
3:	8,9	↖
4:	10,5*	↑
5:	10,7*	→
Serie:		47,0
Summa:		243,0

10 skott

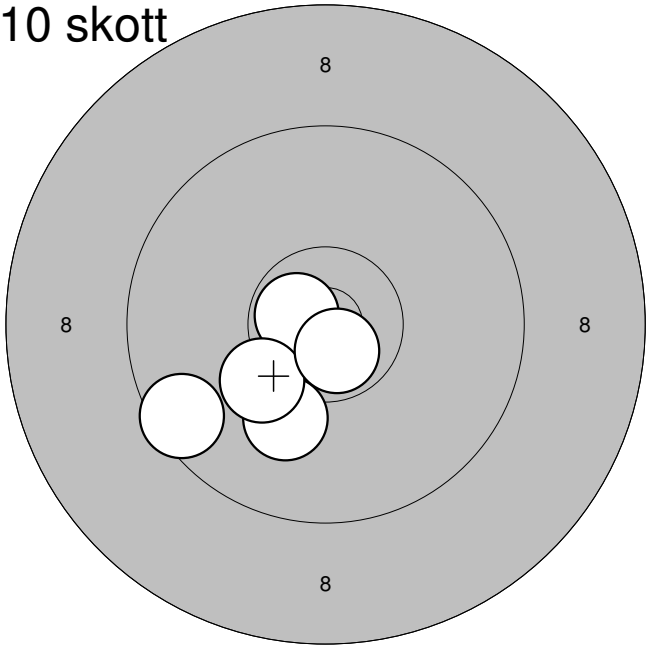

6:	10,1	↙
7:	10,7*	←
8:	9,5	↙
9:	10,3	↙
10:	10,7*	↘
Serie:		49,0
Summa:		292,0

Enkeltskott

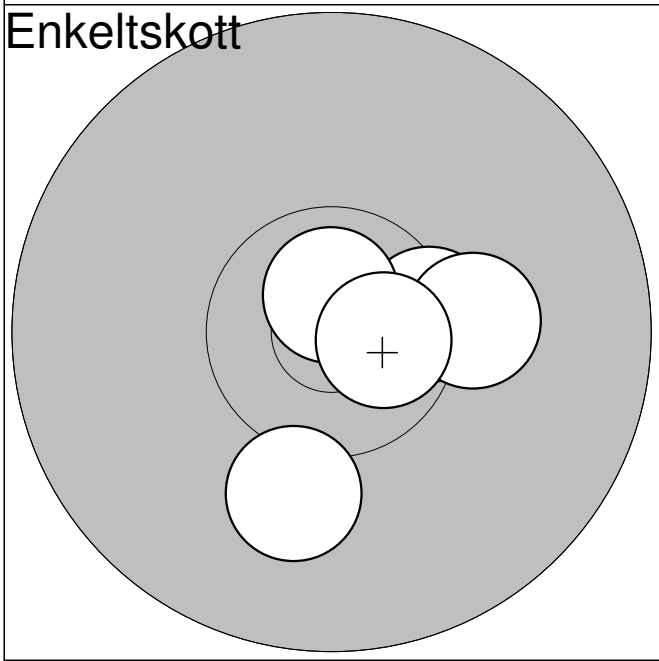

1:	10,4*	→
2:	10,2	→
3:	10,8*	↑
4:	10,1	↓
5:	10,7*	→
Serie:		50,0
Summa:		342,0

Lag	Tavla	
13	13	Fredrik Karlsson

	Jönköping	Sen	
07.08.2009	SM 2009 Final Liggande	Jönköpings SG	

10 skott

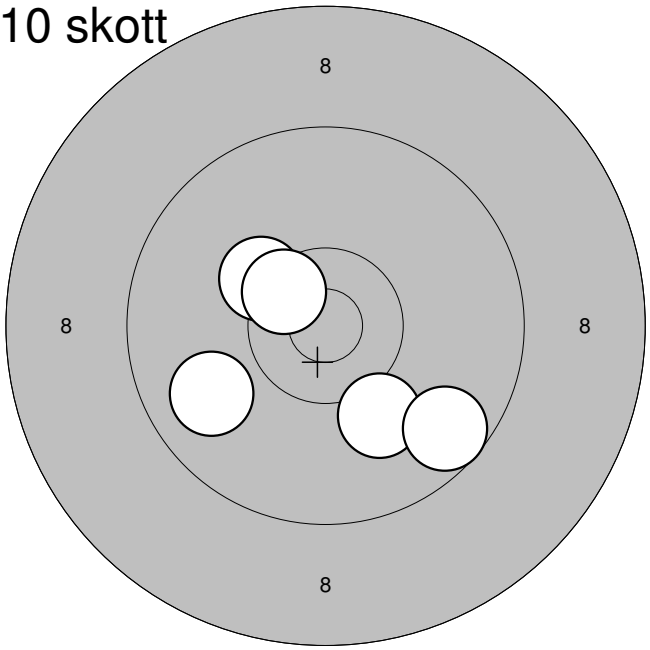

1:	10,1	↘
2:	9,9	↙
3:	9,6	↘
4:	10,3*	↖
5:	10,5*	↖
Serie:		48,0
Summa:		244,0

10 skott

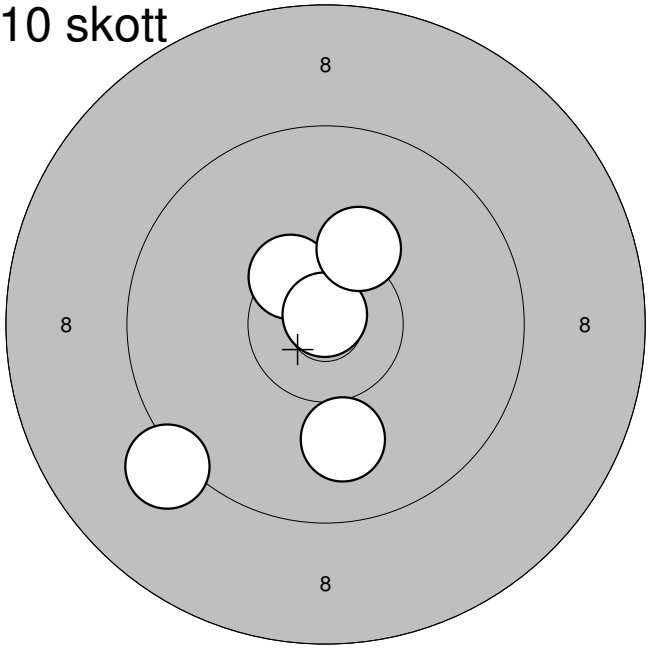

6:	10,0	↓
7:	10,5*	↖
8:	9,2	↙
9:	10,9*	↑
10:	10,3	↗
Serie:		49,0
Summa:		293,0

Enkeltskott

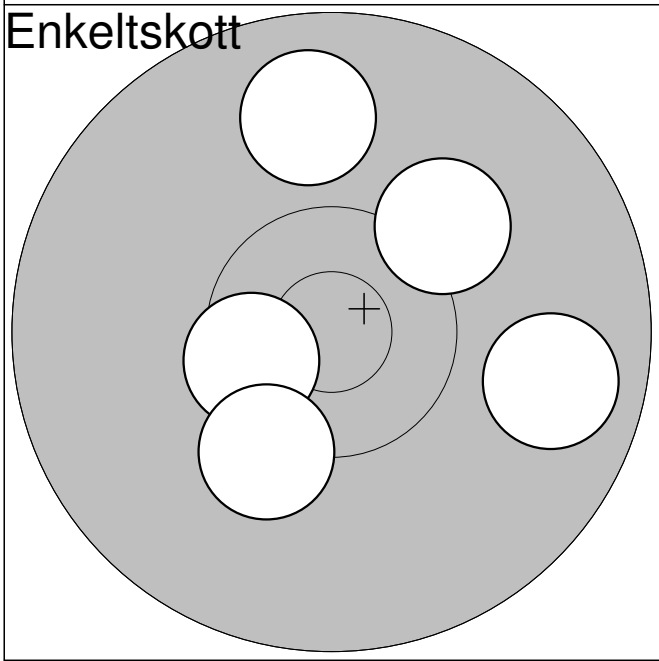

1:	10,2	↗
2:	9,8	↑
3:	9,8	→
4:	10,5*	←
5:	10,2	↙
Serie:		48,0
Summa:		341,0

Lag	Tavla	Patrik Johansson		
13	14			
		Upphärad	Sen	
07.08.2009		SM 2009 Final Liggande	Jönköpings SG	

10 skott

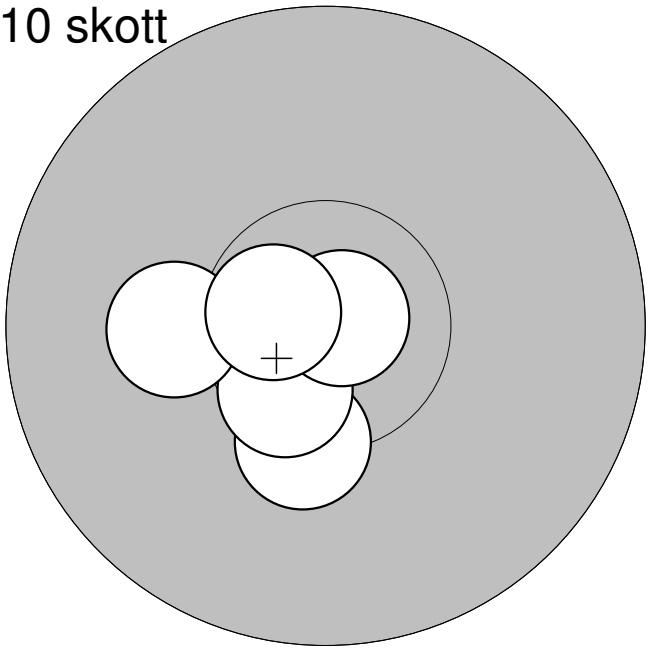

1:	10,3*	↓
2:	10,6*	↙
3:	10,2	←
4:	10,9*	↗
5:	10,7*	↖
Serie:		50,0
Summa:		246,0

10 skott

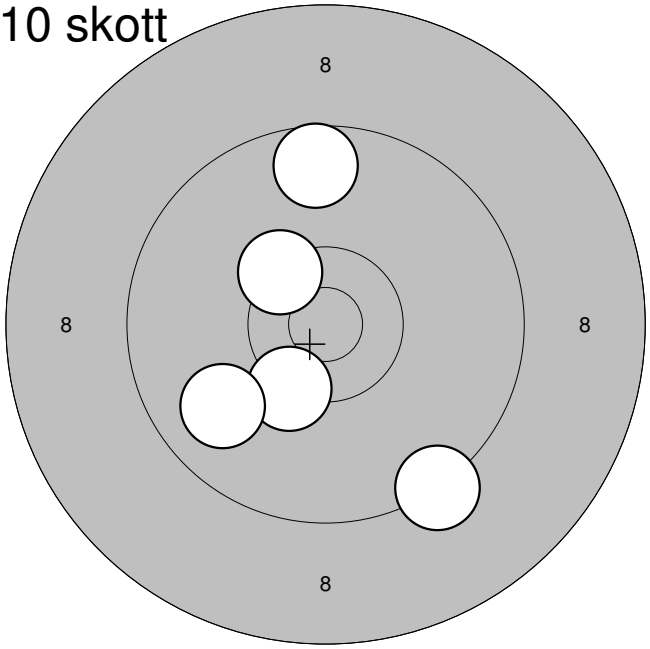

6:	9,3	↘
7:	10,3*	↙
8:	9,9	↙
9:	10,4*	↖
10:	9,6	↑
Serie:		47,0
Summa:		293,0

Enkeltskott

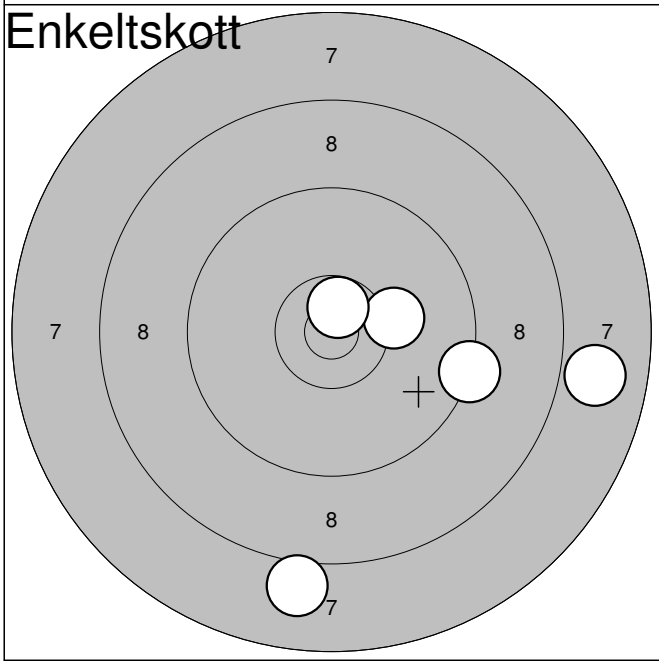

1:	10,2	→
2:	10,7*	↑
3:	7,9	→
4:	8,0	↓
5:	9,3	→
Serie:		44,0
Summa:		337,0

Lag	Tavla	
13	15	Linda Olofsson

	Kinneved	Sen
07.08.2009	SM 2009 Final Liggande	Jönköpings SG

10 skott

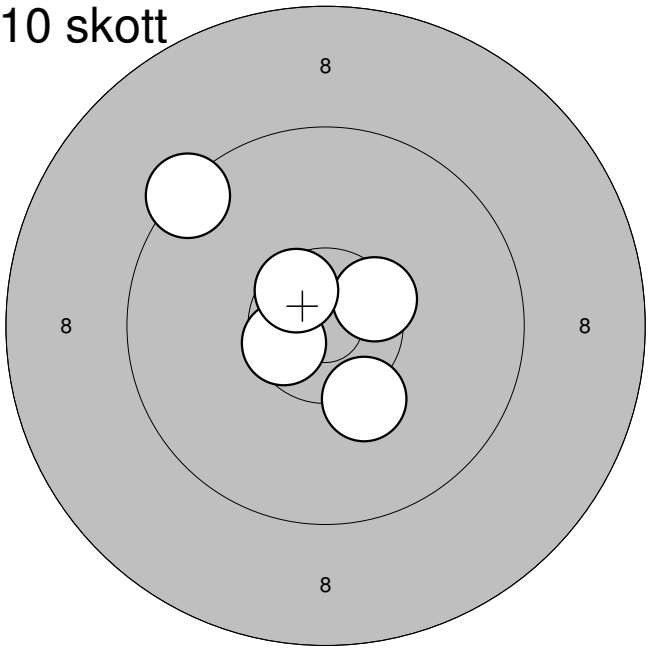

1:	10,5*	↗
2:	10,6*	↙
3:	9,4	↖
4:	10,6*	↖
5:	10,3	↙
Serie:		49,0
Summa:		245,0

10 skott

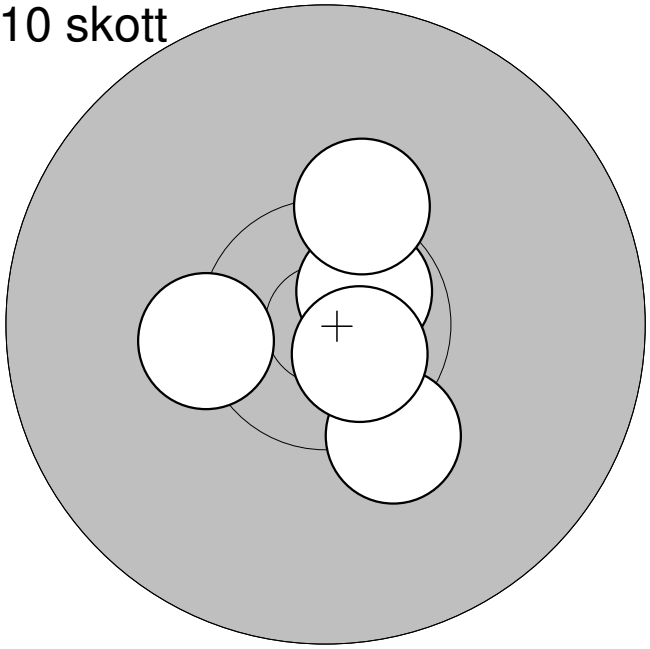

6:	10,3	↘
7:	10,3*	←
8:	10,7*	↗
9:	10,3*	↑
10:	10,7*	↘
Serie:		50,0
Summa:		295,0

Enkeltskott

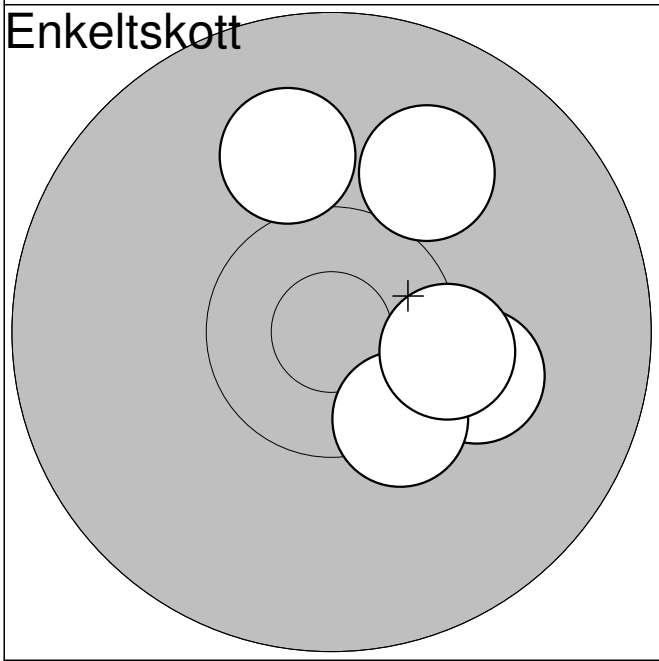

1:	10,2	→
2:	10,4*	↘
3:	10,0	↗
4:	10,0	↑
5:	10,3*	→
Serie:		50,0
Summa:		345,0

Lag	Tavla	
13	16	Tom Axelsson

	Göteborg	Sen	
07.08.2009	SM 2009 Final Liggande	Jönköpings SG	

10 skott

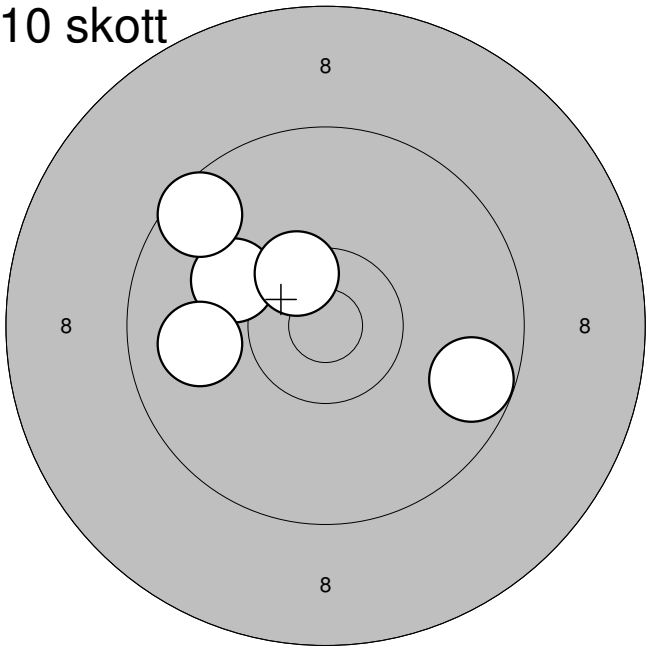

1:	10,1	↖
2:	9,6	↗
3:	10,5*	↗
4:	9,9	←
5:	9,7	↘
Serie:		47,0
Summa:		242,0

10 skott

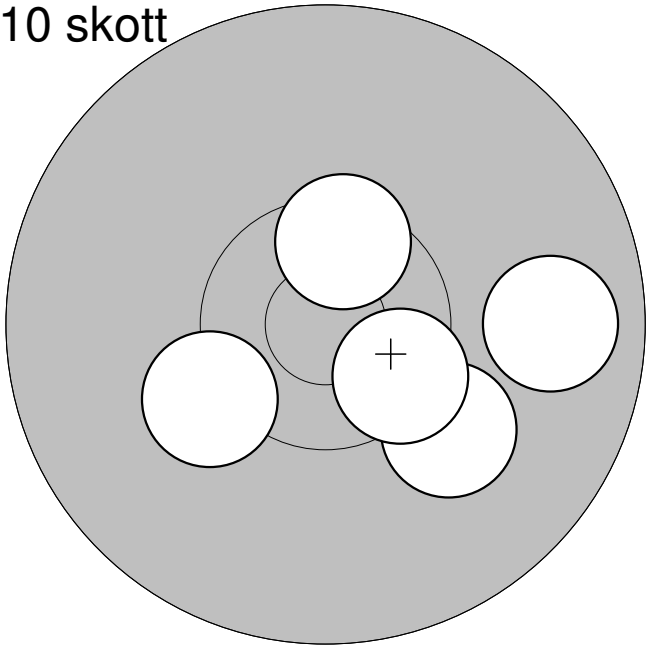

6:	10,5*	↑
7:	10,1	↘
8:	9,8	→
9:	10,2	↙
10:	10,5*	↘
Serie:		49,0
Summa:		291,0

Enkeltskott

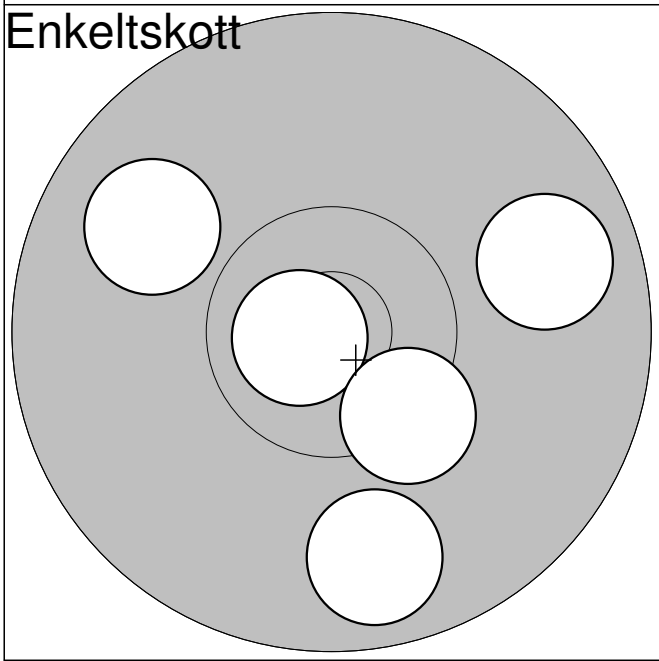

1:	9,8	↓
2:	9,9	↗
3:	9,8	→
4:	10,8*	←
5:	10,4*	↘
Serie:		47,0
Summa:		338,0

Lag	Tavla	
13	17	Karl-Johan Jönsson

	Göteborg	Sen	
07.08.2009	SM 2009 Final Liggande	Jönköpings SG	

10 skott

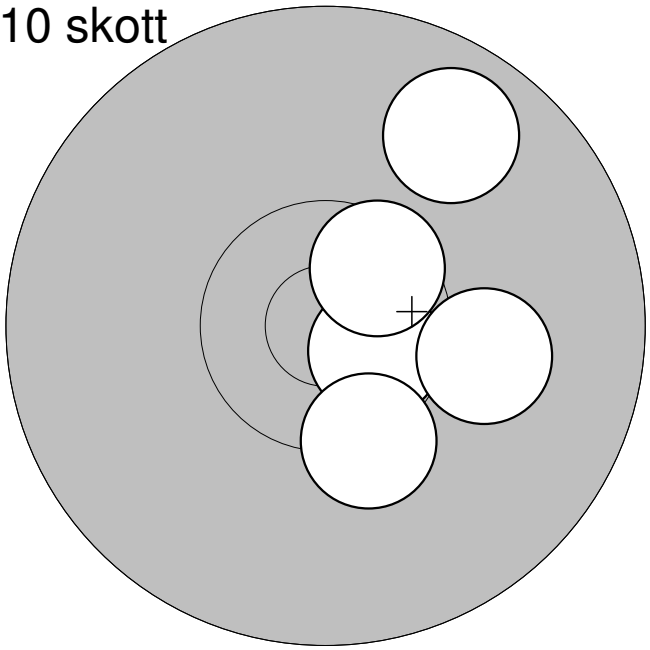

1:	10,7*	↘
2:	10,3*	↓
3:	10,6*	↗
4:	10,1	→
5:	9,8	↗
Serie:		49,0
Summa:		244,0

10 skott

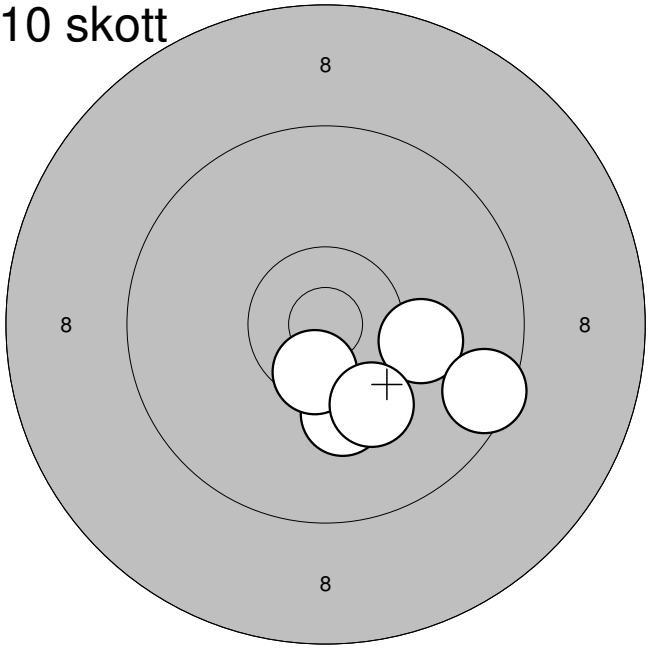

6:	10,1	→
7:	10,2	↓
8:	9,5	↘
9:	10,5*	↓
10:	10,2	↘
Serie:		49,0
Summa:		293,0

Enkeltskott

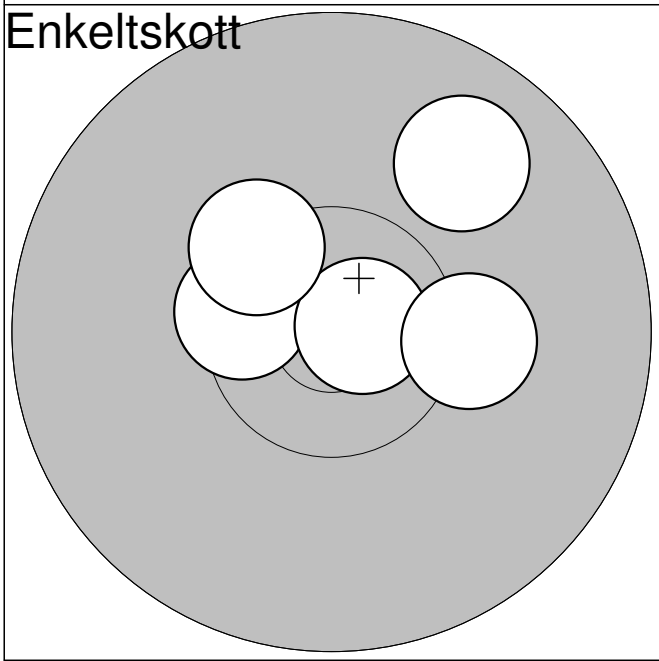

1:	10,5*	←
2:	10,8*	→
3:	10,2	→
4:	10,4*	↖
5:	9,9	↗
Serie:		49,0
Summa:		342,0

Lag	Tavla	
13	18	Kim Jönsson

	Svedala-Börringe	Sen	
07.08.2009	SM 2009 Final Liggande	Jönköpings SG	

10 skott

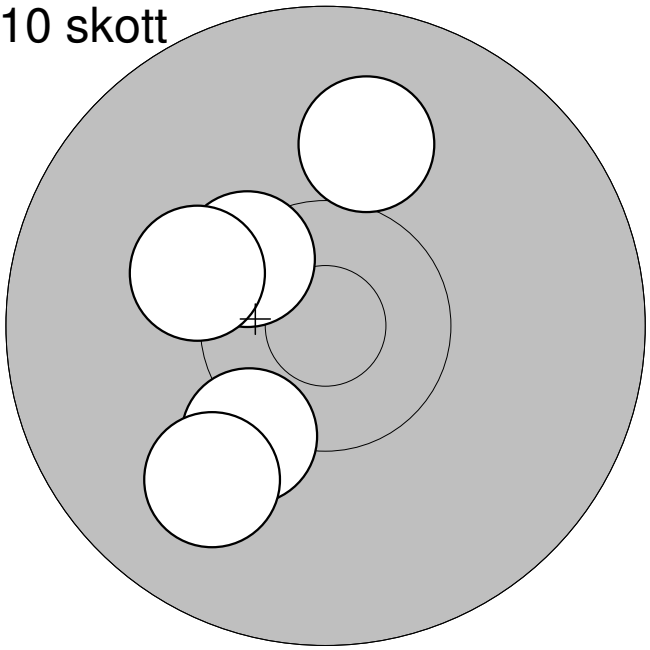

1:	10,0	↑
2:	10,3	↙
3:	10,0	↙
4:	10,4*	↖
5:	10,2	←
Serie:		50,0
Summa:		245,0

10 skott

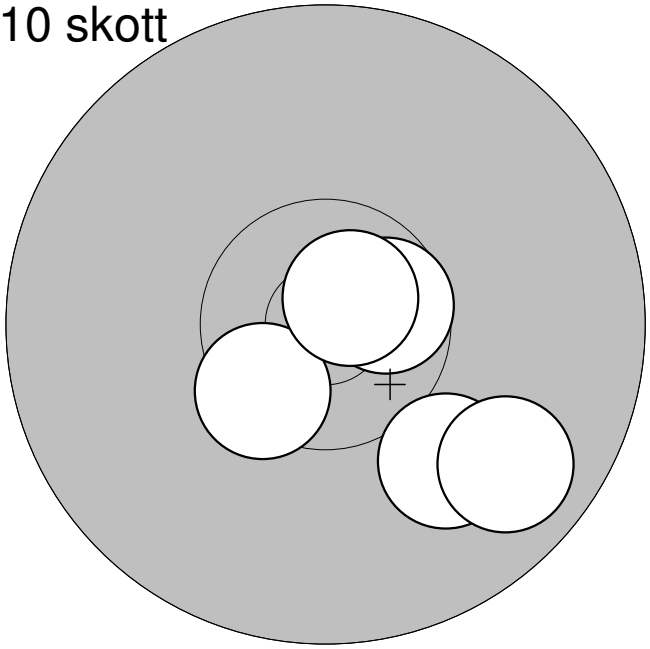

6:	10,6*	→
7:	10,0	↘
8:	9,8	↘
9:	10,5*	↙
10:	10,8*	↗
Serie:		49,0
Summa:		294,0

Enkeltskott

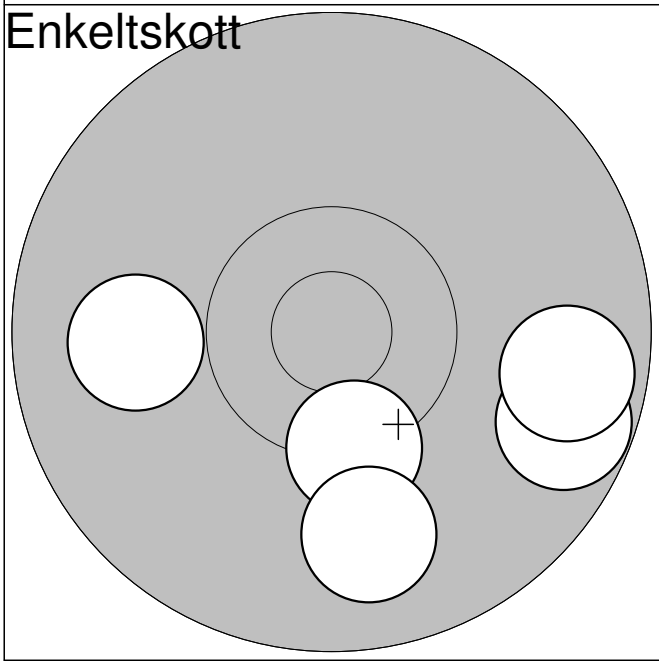

1:	9,9	←
2:	10,3*	↓
3:	9,7	↘
4:	9,7	→
5:	9,9	↓
Serie:		46,0
Summa:		340,0

Lag	Tavla	
13	19	Håkan Hertzman

	Gullabo	Sen	
07.08.2009	SM 2009 Final Liggande	Jönköpings SG	

10 skott

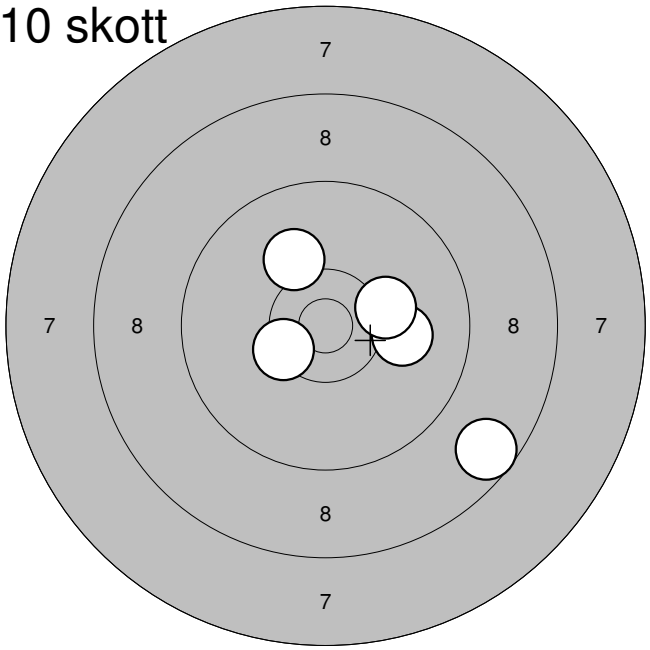

1:	10,1	↖
2:	8,6	↘
3:	10,4*	↙
4:	10,1	→
5:	10,2	→
Serie:		48,0
Summa:		243,0

10 skott

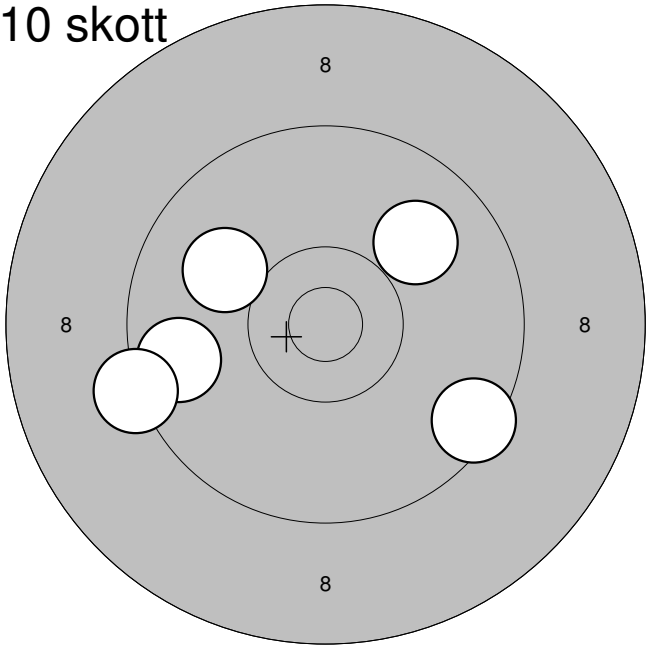

6:	9,7	↙
7:	9,3	↙
8:	9,9	↗
9:	9,5	↘
10:	10,0	↖
Serie:		46,0
Summa:		289,0

Enkeltskott

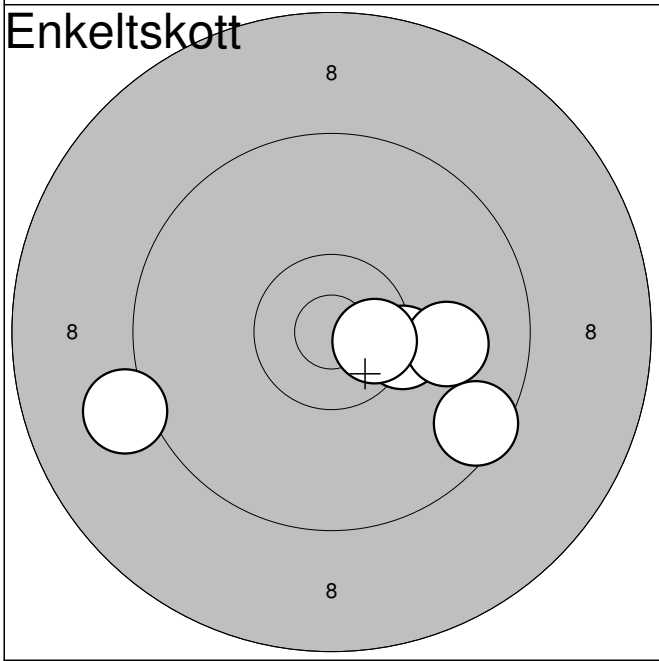

1:	9,1	↙
2:	10,3*	→
3:	10,0	→
4:	9,5	↘
5:	10,6*	→
Serie:		48,0
Summa:		337,0

Lag	Tavla	Victoria Willhelmsson		
13	20			
		Nässjö	Sen	
07.08.2009		SM 2009 Final Liggande	Jönköpings SG	

10 skott

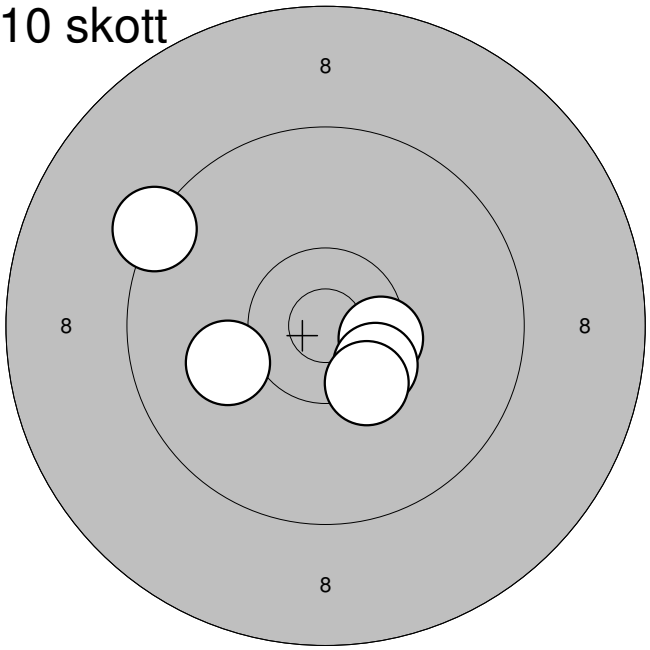

1:	9,3	↖
2:	10,5*	→
3:	10,1	←
4:	10,4*	↘
5:	10,4*	↙
Serie:		49,0
Summa:		243,0

10 skott

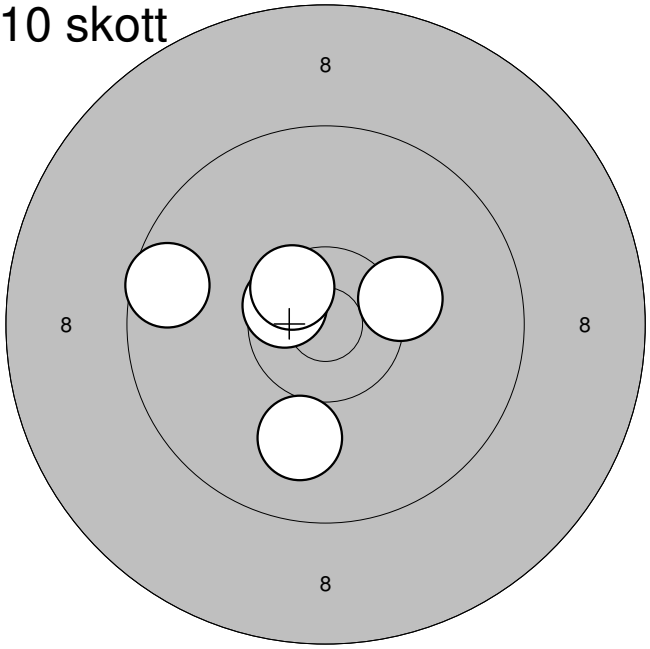

6:	10,3*	→
7:	9,6	←
8:	10,6*	←
9:	10,5*	↖
10:	10,0	↓
Serie:		49,0
Summa:		292,0

Enkeltskott

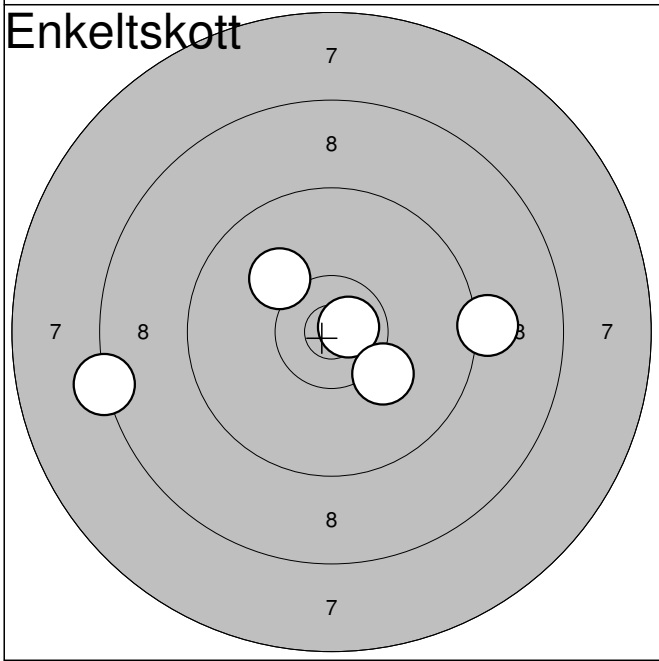

1:	10,7*	→
2:	10,2	↘
3:	9,2	→
4:	8,3	←
5:	10,1	↖
Serie:		47,0
Summa:		339,0

Lag	Tavla	
13	21	Viktor Karlsson

	Ålem	Sen	
07.08.2009	SM 2009 Final Liggande	Jönköpings SG	

10 skott

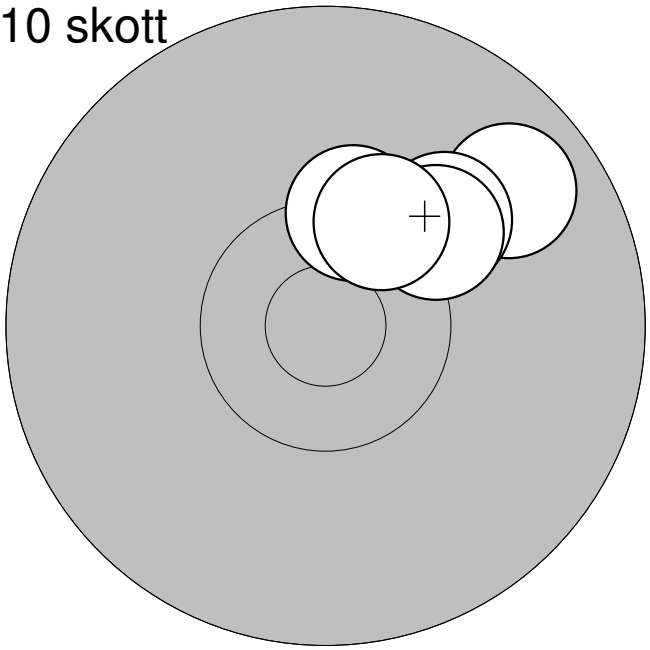

1:	9,8	↗
2:	10,1	↗
3:	10,4*	↑
4:	10,2	↗
5:	10,3*	↗
Serie:		49,0
Summa:		243,0

10 skott

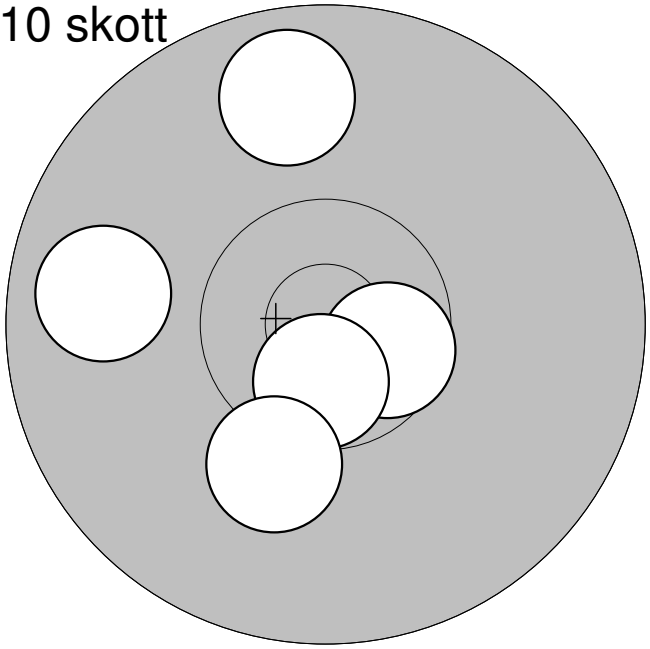

6:	9,8	↑
7:	10,6*	↘
8:	10,7*	↓
9:	10,2	↙
10:	9,8	←
Serie:		48,0
Summa:		291,0

Enkeltskott

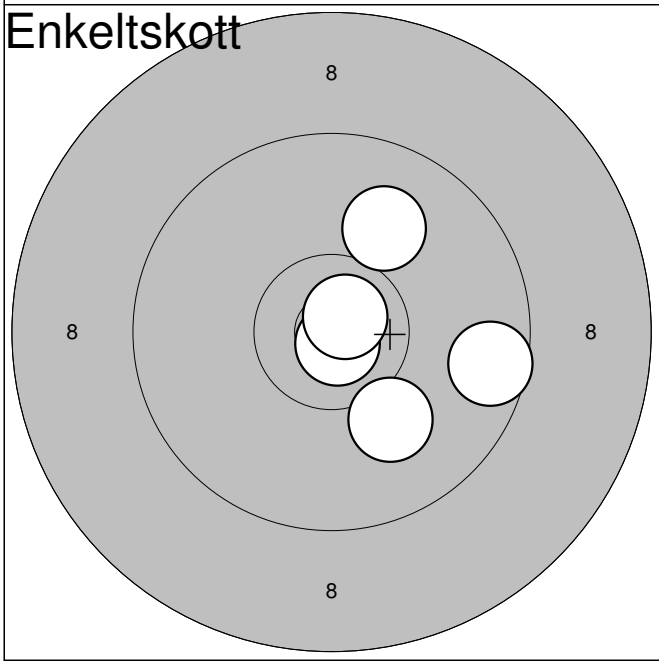

1:	10,0	↗
2:	10,8*	↘
3:	10,1	↘
4:	10,8*	↗
5:	9,6	→
Serie:		49,0
Summa:		340,0

Lag	Tavla	Claes Söderdahl		
13	22			
		Brönnestad	Sen	
07.08.2009		SM 2009 Final Liggande	Jönköpings SG	

10 skott

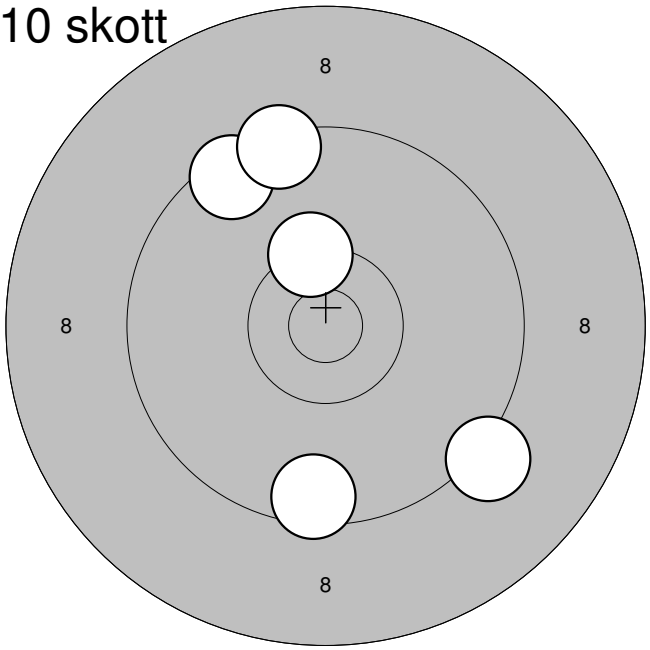

1:	10,4*	↑
2:	9,5	↖
3:	9,4	↑
4:	9,5	↓
5:	9,2	↘
Serie:		46,0
Summa:		240,0

10 skott

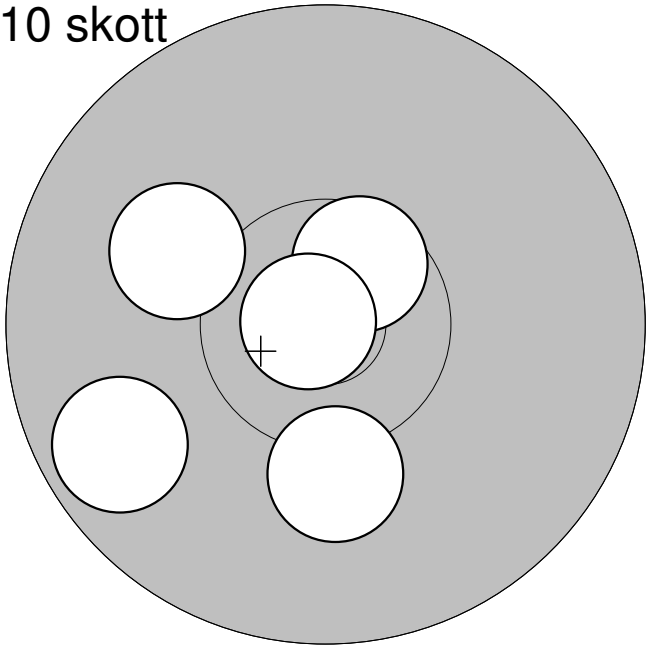

6:	9,7	↙
7:	10,6*	↗
8:	10,2	↓
9:	10,9*	←
10:	10,1	↖
Serie:		49,0
Summa:		289,0

Enkeltskott

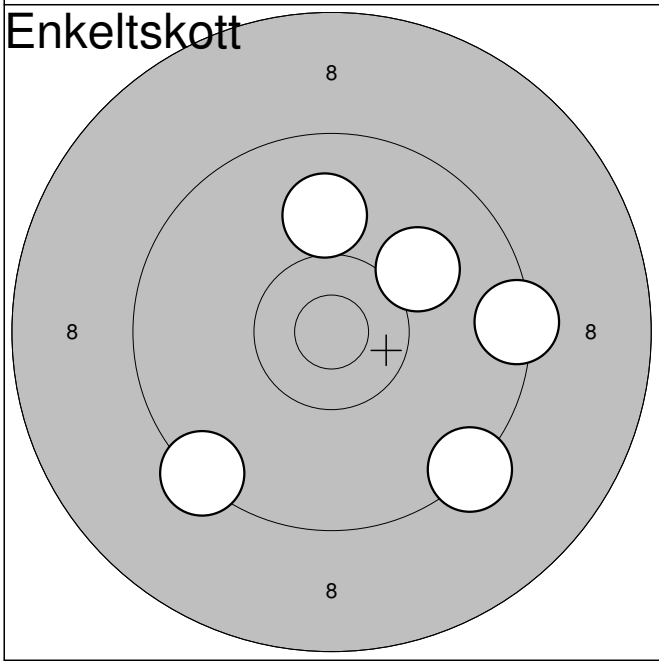

1:	10,1	↗
2:	9,4	↙
3:	9,3	↘
4:	10,0	↑
5:	9,4	→
Serie:		47,0
Summa:		336,0

Lag	Tavla	Anita Hammar		
13	23			
		Haraker	Sen	
07.08.2009		SM 2009 Final Liggande	Jönköpings SG	

10 skott

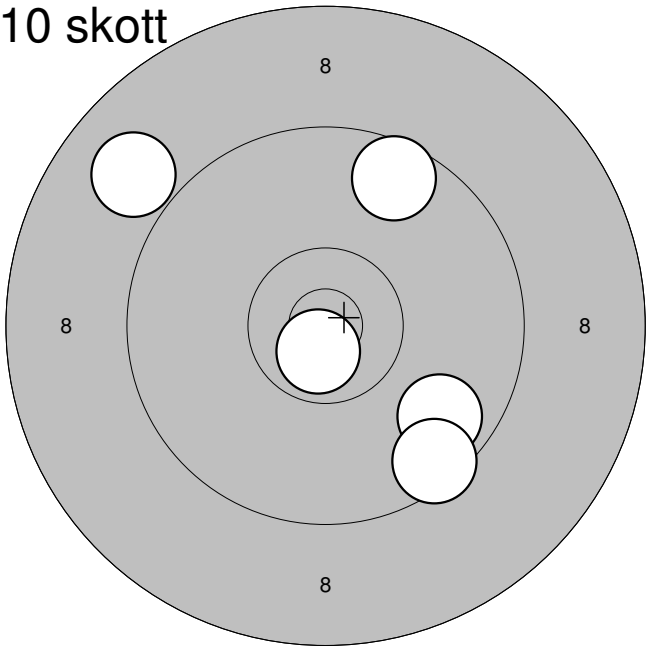

1:	9,7	↘
2:	8,9	↖
3:	9,6	↗
4:	9,5	↘
5:	10,7*	↙
Serie:		45,0
Summa:		239,0

10 skott

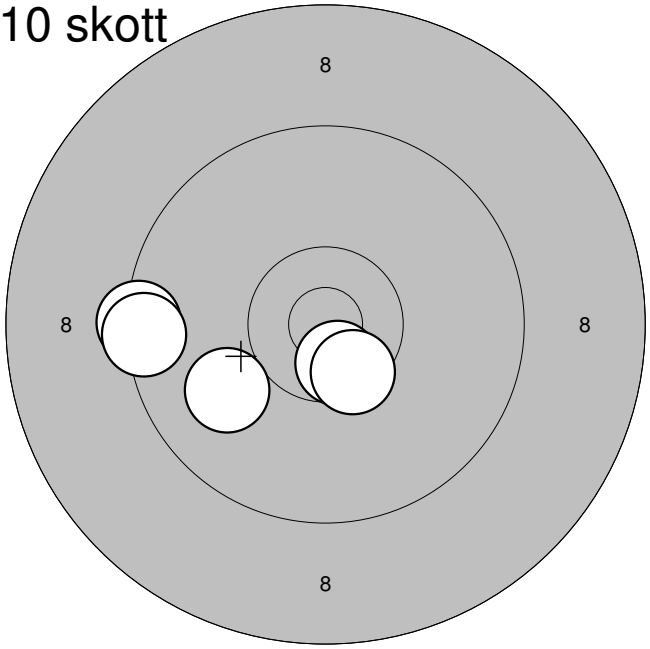

6:	9,4	←
7:	10,0	↙
8:	10,6*	↓
9:	10,5*	↘
10:	9,4	←
Serie:		48,0
Summa:		287,0

Enkeltskott

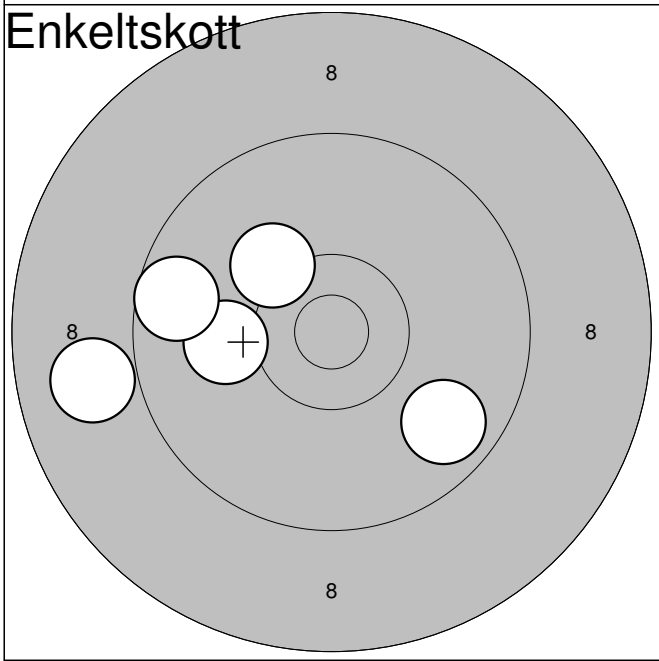

1:	10,2	↖
2:	10,1	←
3:	9,8	↘
4:	9,6	←
5:	8,9	←
Serie:		46,0
Summa:		333,0

Lag	Tavla	
13	24	Eric Wallberg

	Arvika	Sen
07.08.2009	SM 2009 Final Liggande	Jönköpings SG

10 skott

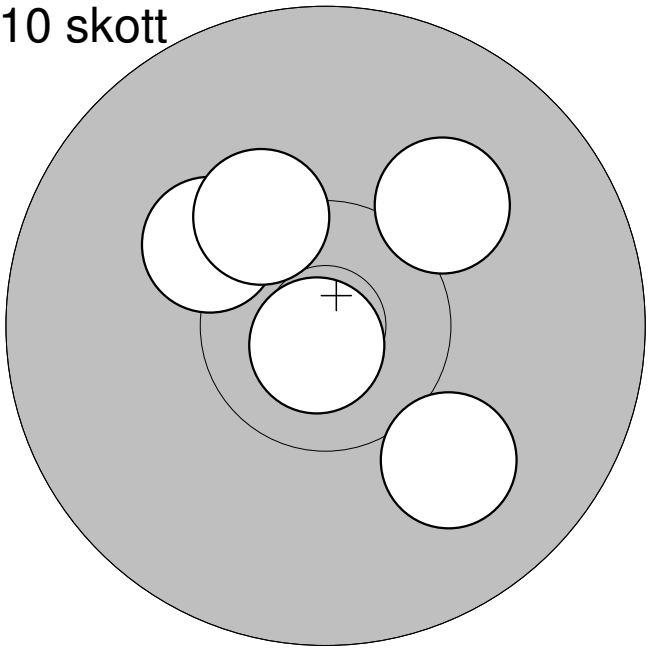

1:	10,1	↗
2:	10,2	↖
3:	10,3*	↗
4:	10,8*	↙
5:	10,0	↘
Serie:		50,0
Summa:		244,0

10 skott

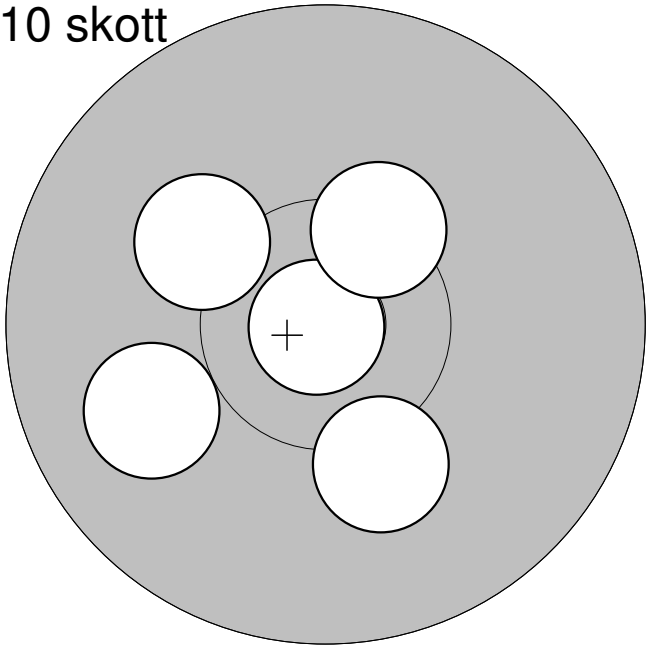

6:	10,2	↓
7:	10,9*	←
8:	10,2	↖
9:	9,9	↙
10:	10,4*	↗
Serie:		49,0
Summa:		293,0

Enkeltskott

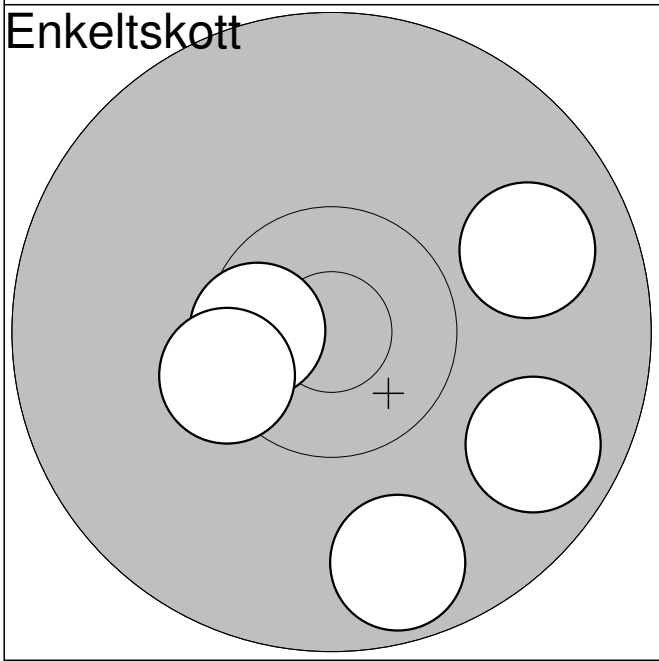

1:	9,7	↓
2:	9,9	↗
3:	9,8	↘
4:	10,6*	←
5:	10,4*	↙
Serie:		47,0
Summa:		340,0

Lag	Tavla	Tobias Olsson		
13	25			
		Löberöd	Sen	
07.08.2009		SM 2009 Final Liggande	Jönköpings SG	

10 skott

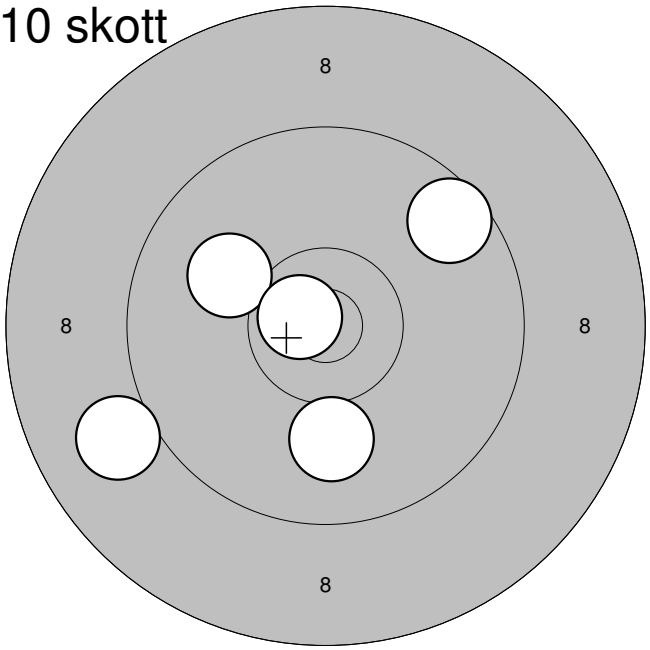

1:	9,6	↗
2:	9,0	↙
3:	10,1	↖
4:	10,0	↓
5:	10,7*	↖
Serie:		48,0
Summa:		242,0

10 skott

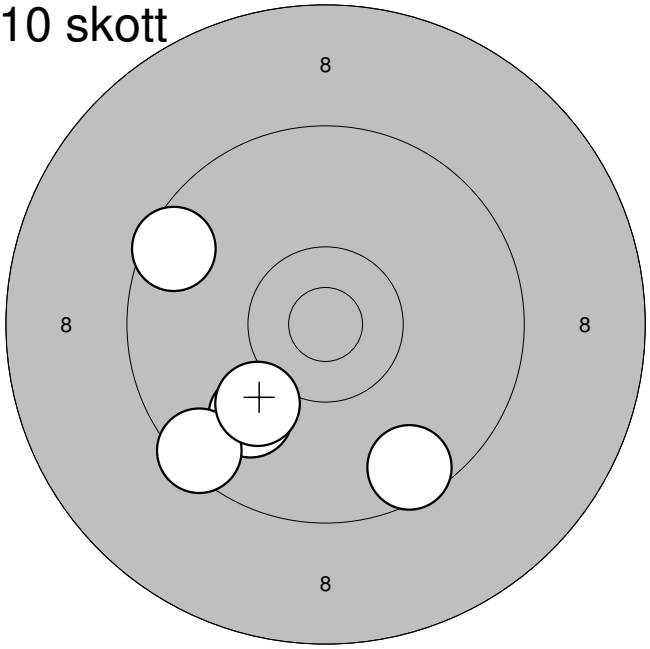

6:	9,6	↘
7:	10,0	↙
8:	9,6	↖
9:	9,5	↙
10:	10,1	↙
Serie:		47,0
Summa:		289,0

Enkeltskott

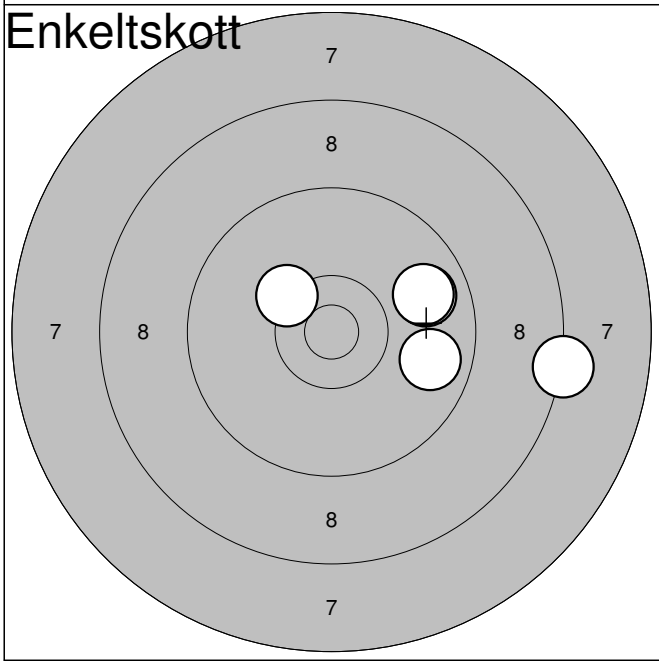

1:	9,8	↗
2:	10,3*	↖
3:	8,3	→
4:	9,8	→
5:	9,8	↗
Serie:		45,0
Summa:		334,0

Lag	Tavla	Johan Christensson		
13	27			
		Falsterbo-Vellinge	Sen	
07.08.2009		SM 2009 Final Liggande	Jönköpings SG	

10 skott

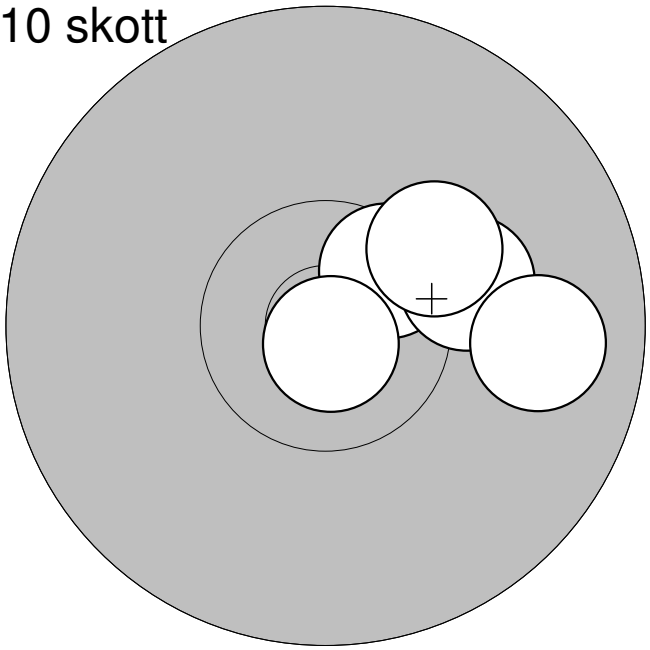

1:	10,5*	↗
2:	10,2	→
3:	10,3	↗
4:	10,8*	↓
5:	9,8	→
Serie:		49,0
Summa:		243,0

10 skott

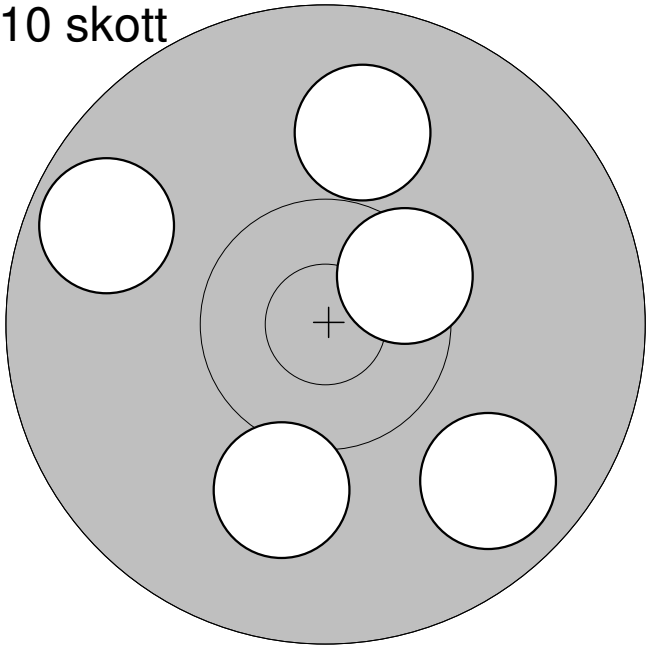

6:	9,7	↖
7:	9,8	↘
8:	10,1	↓
9:	10,5*	↗
10:	9,9	↑
Serie:		47,0
Summa:		290,0

Enkeltskott

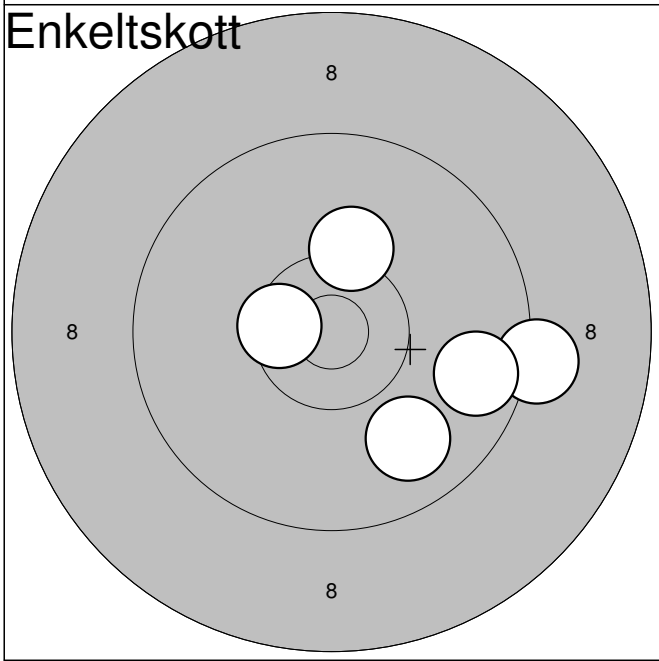

1:	10,2	↑
2:	9,9	↙
3:	9,2	→
4:	10,5*	←
5:	9,7	↘
Serie:		47,0
Summa:		337,0

Lag	Tavla	Lars Magnusson		
13	28			
		Skillingmark	Sen	
07.08.2009		SM 2009 Final Liggande	Jönköpings SG	

10 skott

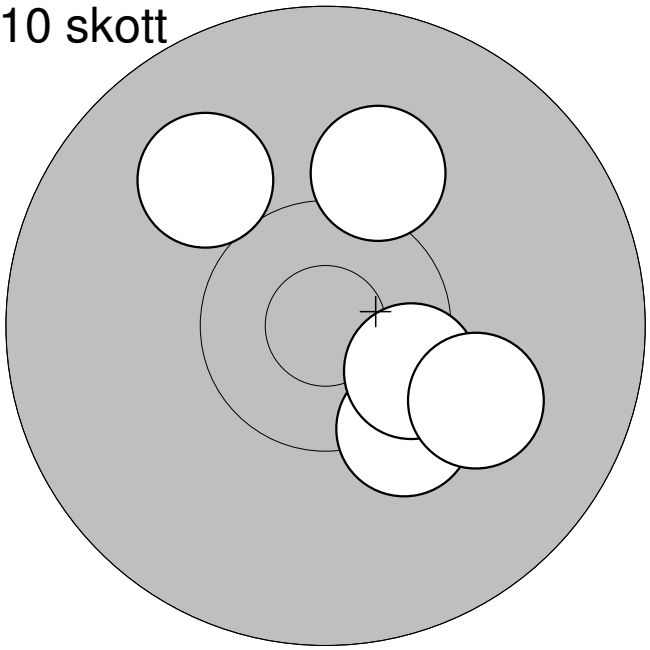

1:	10,3	↘
2:	10,4*	↘
3:	10,1	↘
4:	10,0	↗
5:	10,1	↗
Serie:		50,0
Summa:		244,0

10 skott

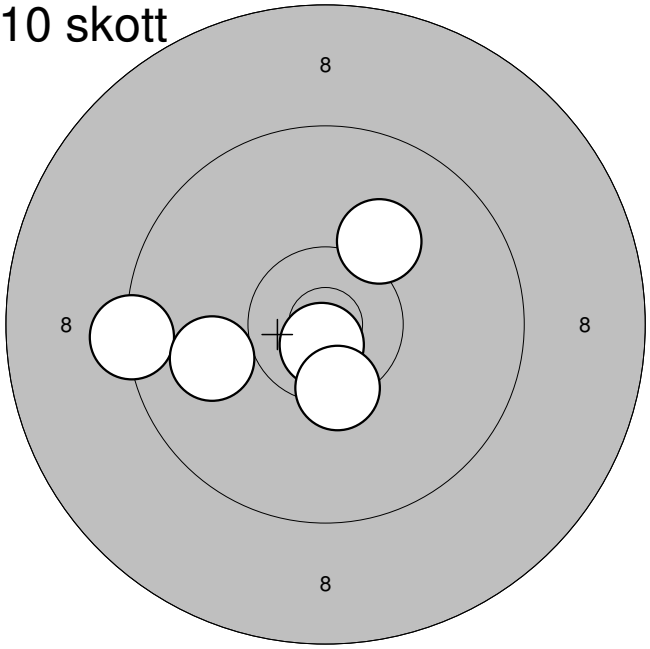

6:	9,3	←
7:	10,1	↗
8:	10,8*	↓
9:	10,4*	↓
10:	10,0	←
Serie:		49,0
Summa:		293,0

Enkeltskott

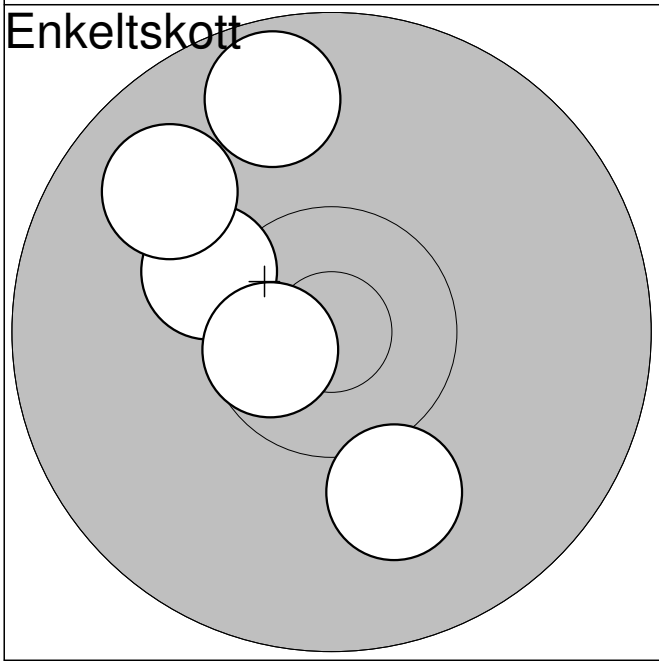

1:	9,7	↑
2:	10,2	↖
3:	10,1	↙
4:	10,6*	←
5:	9,8	↖
Serie:		48,0
Summa:		341,0

Lag	Tavla	Johanna Fritzon		
13	29			
		Kinneved	Sen	
07.08.2009		SM 2009 Final Liggande	Jönköpings SG	

10 skott

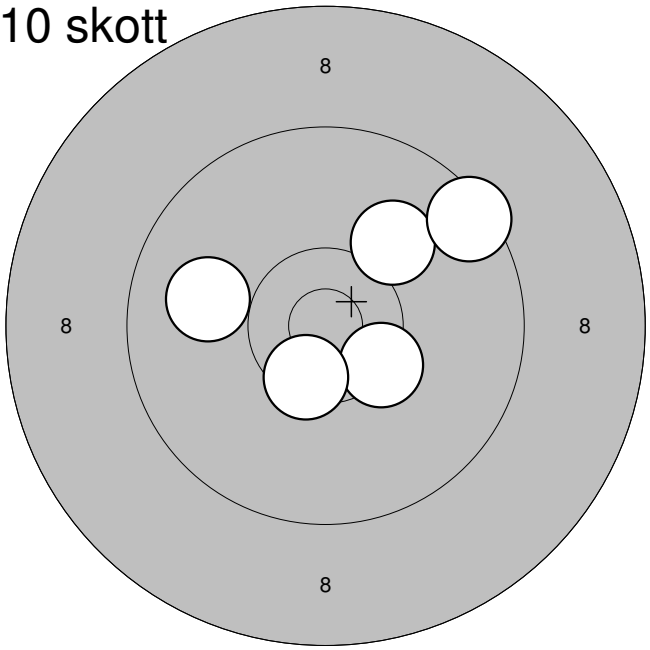

1:	10,0	←
2:	10,1	↗
3:	9,5	↗
4:	10,4*	↘
5:	10,5*	↙
Serie:		49,0
Summa:		243,0

10 skott

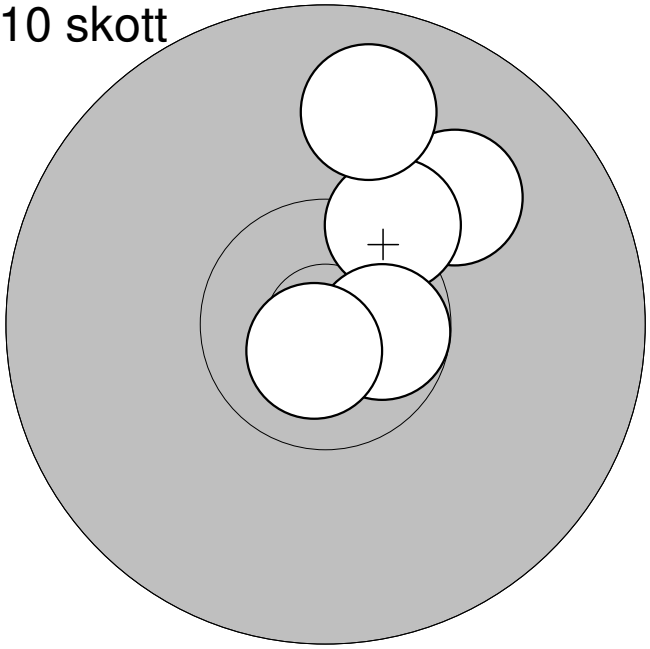

6:	10,0	↗
7:	10,3*	↗
8:	10,7*	→
9:	9,8	↑
10:	10,8*	↙
Serie:		49,0
Summa:		292,0

Enkeltskott

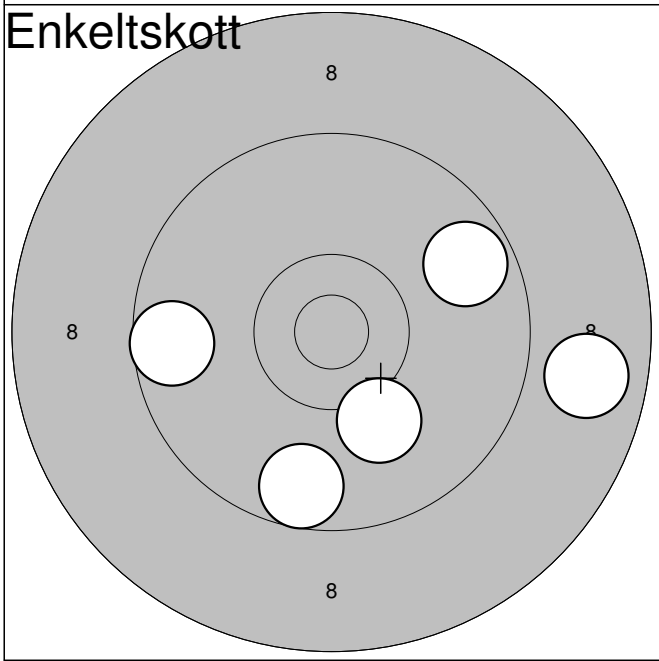

1:	9,6	↙
2:	9,7	↗
3:	8,8	→
4:	10,1	↘
5:	9,6	←
Serie:		45,0
Summa:		337,0

Lag	Tavla	
13	30	Henrik Bengtsson

	Svedala-Börringe	Sen	
07.08.2009	SM 2009 Final Liggande	Jönköpings SG	

10 skott

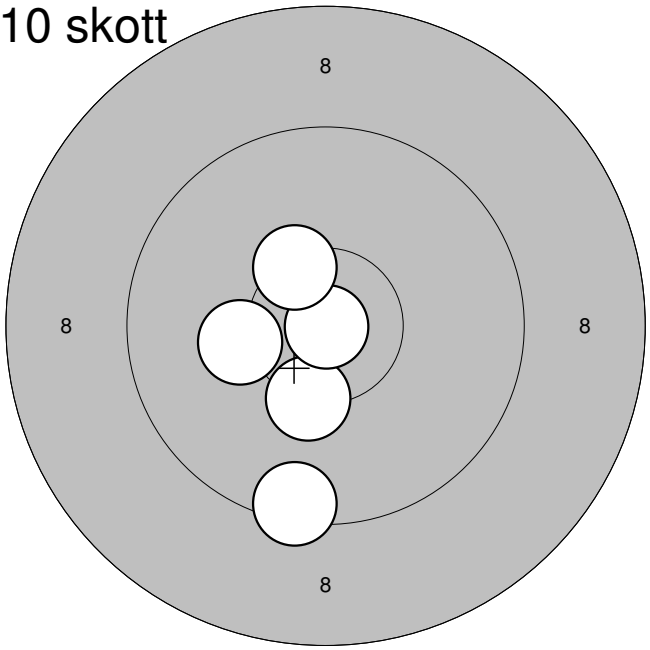

1:	10,3*	↓
2:	10,9*	↘
3:	9,5	↓
4:	10,2	←
5:	10,4*	↖
Serie:		49,0
Summa:		243,0

10 skott

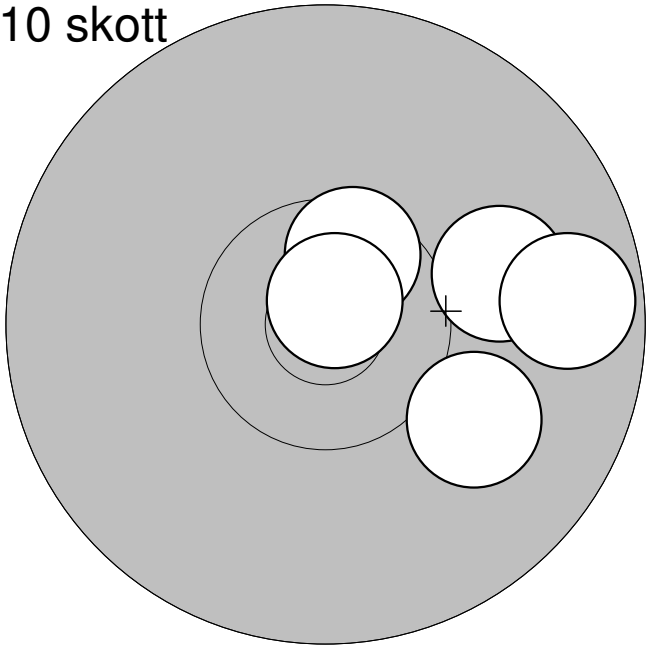

6:	10,0	→
7:	9,7	→
8:	10,6*	↗
9:	10,8*	↗
10:	10,0	↘
Serie:		49,0
Summa:		292,0

Enkeltskott

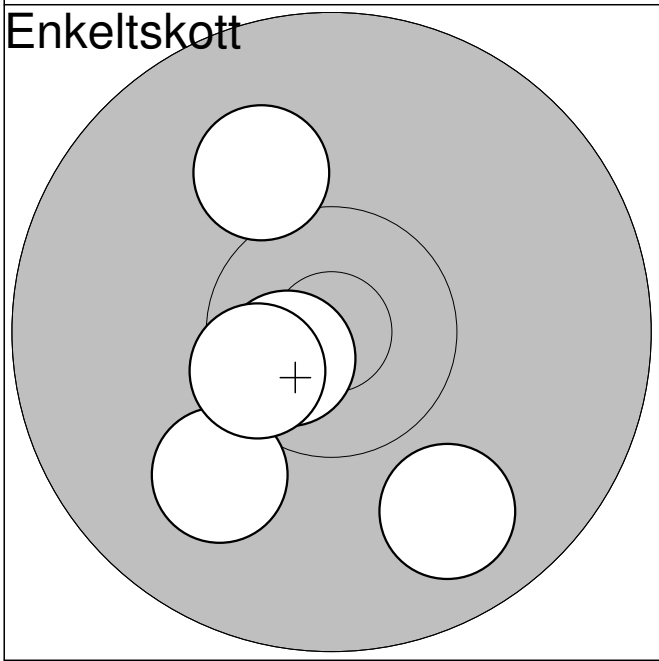

1:	10,1	↖
2:	10,7*	↙
3:	9,8	↘
4:	10,0	↙
5:	10,5*	←
Serie:		49,0
Summa:		341,0